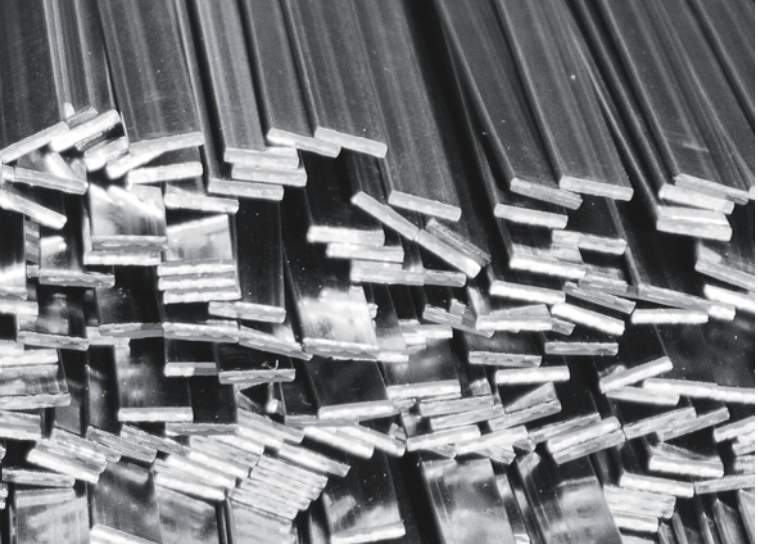

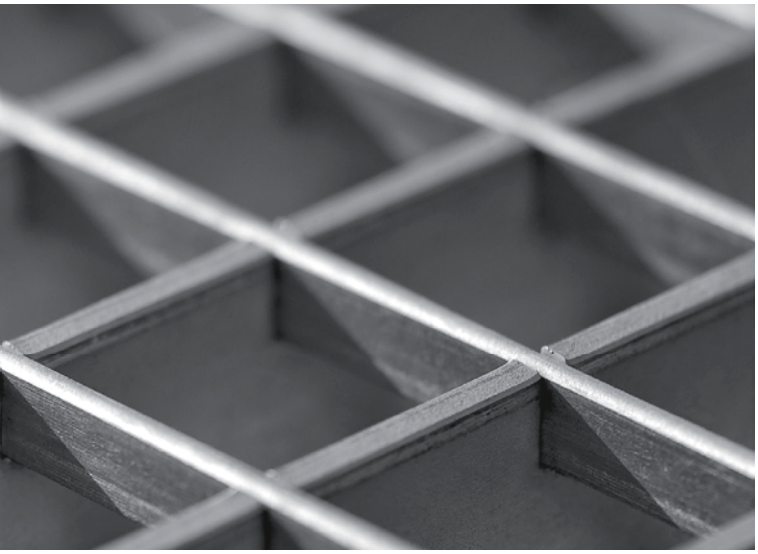

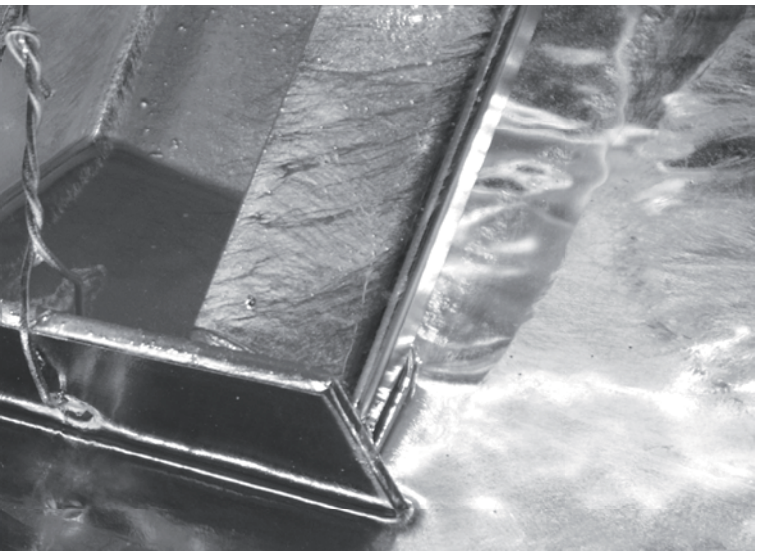

Termetal
GRUPA

List of contents

Platform gratings

Platform gratings

1.1. Grating production technology

TERMETAL is a producer of platform gratings welded on automated welding lines. This process requires welding of grating elements: bearing flat bars and joining transverse bars. Spaces which are created between those elements are called grating meshes, and they make it possible to create various solutions, due to their size, and also to use additional elements. The basic elements of gratings – bearing and transverse bars – create one common surface at the top. Due to the fact that distances between bars/-flat bars as well as additional elements vary, **TERMETAL** offers a very wide range of products.

1.2. Materials

The basic materials used are bearing flat bars which are obtained as a result of lengthwise cutting of metal sheet coils to the desired length of gratings. The basic type of steel used is S235 (according to the PN-EN 10025:2007 standard,) hot rolled in accordance with the PN-EN 10051+A1 standard, and its equivalents (according to other standards).
In order to make gratings it is necessary to also use bearing cold rolled flat bars. They comply with the durability requirements for S 235, S 275, S 355 steel.
Transverse bars are obtained as a result of special plastic processing based on calibration and addition of gouges that support and increase the anti-slippery properties of those elements. Stainless steel type INOX 304 or acid-proof INOX 316 steel may also be used to make those elements. In order to make gratings from stainless steel, stainless or acid-proof round smooth bars are used.

1.3. Corrosion protection

In line with popular expectations, **TERMETAL** protects its products against corrosion via hot-dip galvanisation conducted according to the EN/ISO 1461 standards. **TERMETAL** has two galvanisation plants which use high technology.
Intermediate products and products made on request may be delivered without corrosion protection.

All production processes in the **TERMETAL** Group comply with the environmental protection requirements, while the technologies used are aimed at minimisation of waste generation.

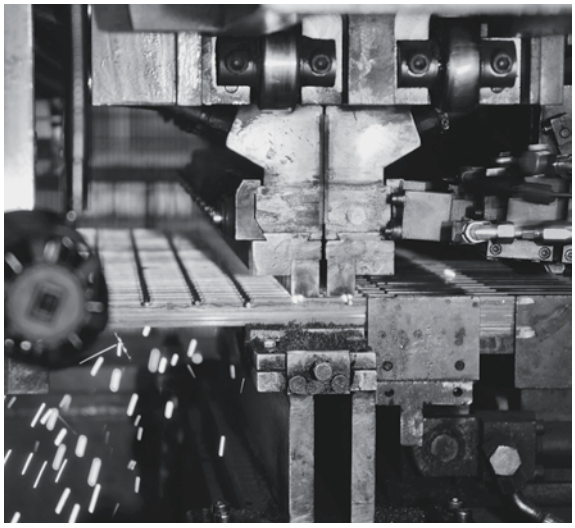

2. Glossary of terms and abbreviations

KNZ/KNO – unframed grating (K-grating, N-unframed; Z-grooved/O-round bar)
KOZ/KOO – framed grating (K-grating, N-framed, Z-grooved/O-round/K-square-shaped)
SOZ – a step
AKP – a sideboard (typically 50x3 and exceeding the surface of the grating/step by 50mm)

MAG – framing below the bottom edge of a grating
ASP – a non-slip panel at the front of a step/grating/landing
ASP-out – a panel at the front of a step / grating /landing (like ASP but without perforation at the top)

WBB – an additional bar sealed at the bottom of transverse bars, between bearing flat bars

SM – perforated tape sealed at the bottom of transverse bars, between bearing flat bars

SERR – a serrated top edge of a bearing flat bar with a cutting that increases the non-slip properties of the grating
X-X – a grating symmetric towards parameter B. If the width of the grating is other than it should result from the size of the mesh, the extreme mesh ends sizes are the same, but other than to 34.3 mm,
Y-Y – a grating symmetric towards parameter L. The ends of bearing bars (or of the frame) are all at the same distance from the closest transverse bar
h – height of a flat bar
g – thickness of a flat bar
L – length of a grating/step, the dimension of the bearing flat bar
B – width of a grating/step; the dimension of the transverse bar
Straight cuttings – straight line cuttings thanks to which a grating has a shape, which is other than rectangular
arc cuttings – grating cuttings other than straight lines
STD – a type of side framing of steps and landings
ESP – a type of side framing of steps and landings
FIN – a type of side framing of steps and landings

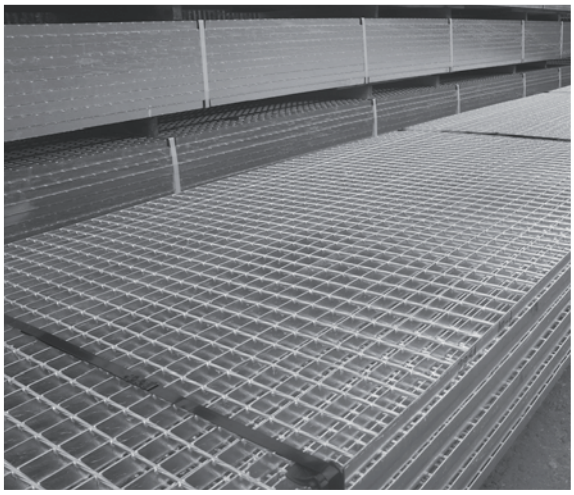

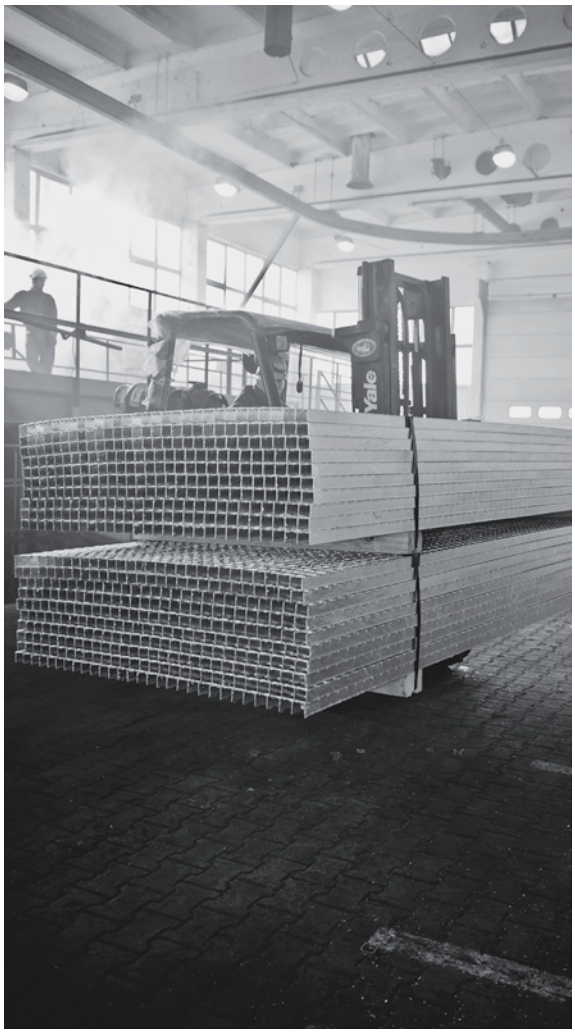

Platform gratings

3. Methods of ordering products

The guidelines below will allow you to specify the parameters of products you would like to order.
e.g. **KOZ/34,3X38,1 /30X2/L=1200 /B=1000/GALV/ (Additional elements such as: WBB, SERR, SM)**

4.1. Framed and unframed gratings

4.1.1. Unframed gratings

a. Panel - it is an unframed grating with bearing bars of a standard length of L=6050
- Exemplary marking: panel KNZ/34,3x38,1/30x2/L=6050/B=1000/ .
- Mats can have also different lengths, for example L=6100, L=5800, L=3050

Worth knowing:	Tolerance for L +/- 10 mm

b. KNZ – is a product obtained from a mat of specific parameters:
- Exemplary marking: KNZ/34,3x38,1 /30x2/L=1200/B=1000/....
- Parameter L may adopt any value, however, it is recommended that parameter B is compliant with the flat bar distances table (Table 2).

Worth knowing:	Tolerances for KNZ are the same as for framed gratings.

Rys. 1. Panels

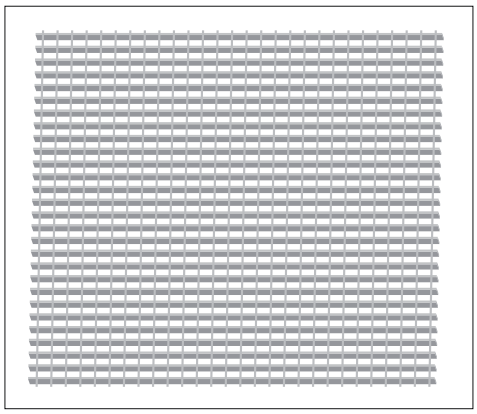

4.1.2. Framed grating

A. KOZ – is a grating which has borders on each side of its flat bar ends
- Exemplary marking: KOZ/34,3x38,1/30x2/L=1000/B=1000/.. .
- Parameter L may adopt any value, while parameter B may be of any value up to 1990 mm.

B. Frame types:

a. Standard - the height of the frame is the same as the bearing bar length; for bearing bars of a thickness g= 2 and 3 mm the frame thickness is g=2 mm (optionally g=3 mm)
- The majority of gratings are framed by sealing boarders to them.
- In some cases, boarders are welded.

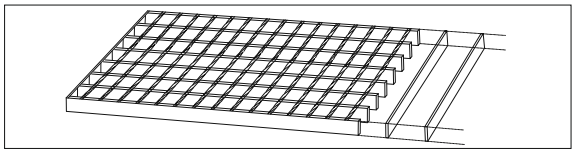

b. AKP – is a sideboard, 3mm thick, which exceeds by 50 mm the surface of the grating at a chosen length.

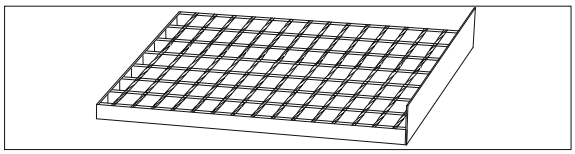

c. MAG – is a type of frame that allows the use of gratings in warehouses

- It is a 2mm-thick frame, which exceeds by 30 mm the surface of the grating at a specific length.

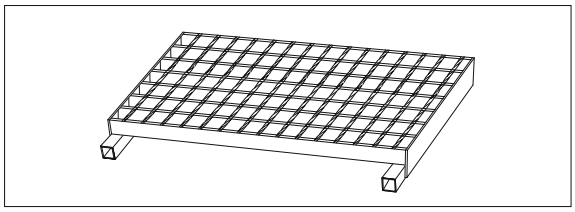

4.2. Mesh types

The distance between flat bars (in the material axis) is 15.08 mm, 30.16 mm, 34.3 mm and 68.6 mm, while the distance between transverse bars is 22.4 mm, 38.1 mm, 50.8 mm, 76.2 mm, 101.6 mm, resulting in the following mesh types (respectively):

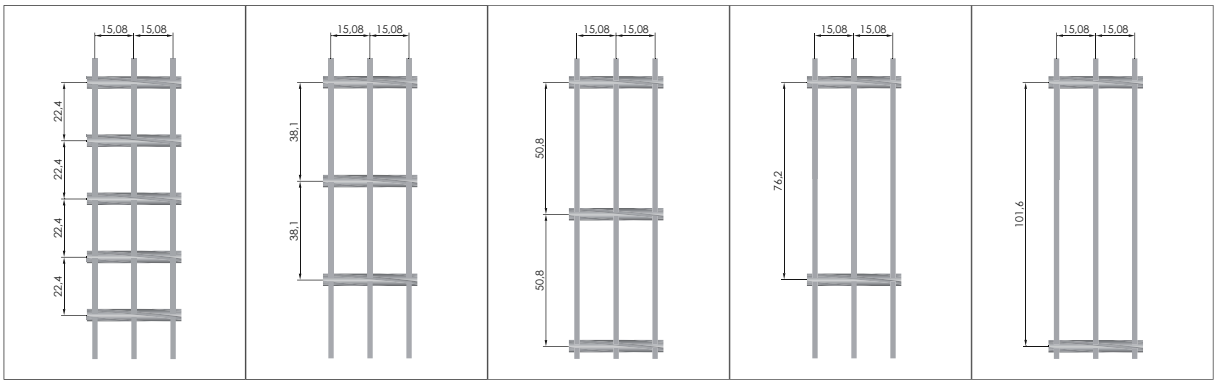

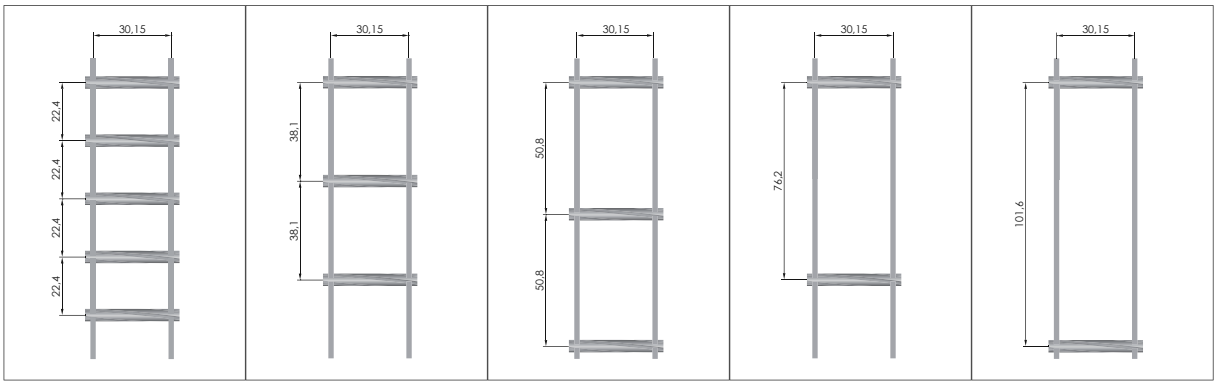

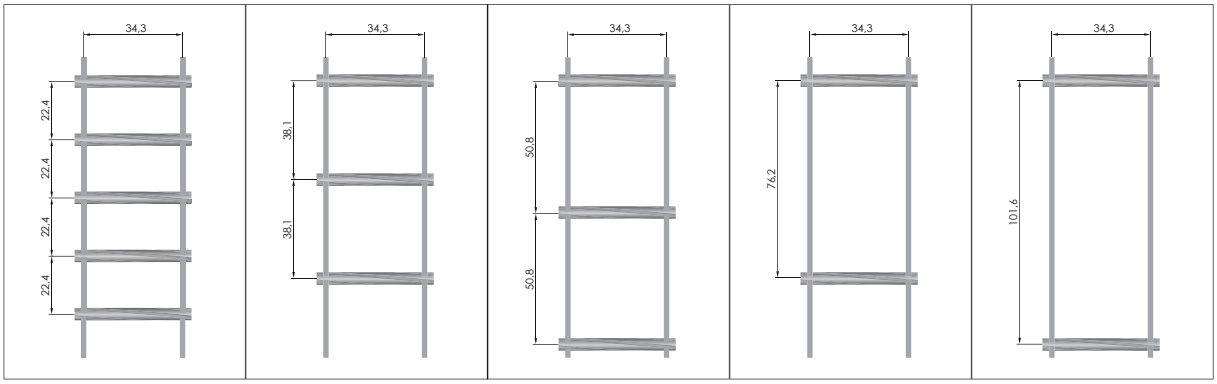

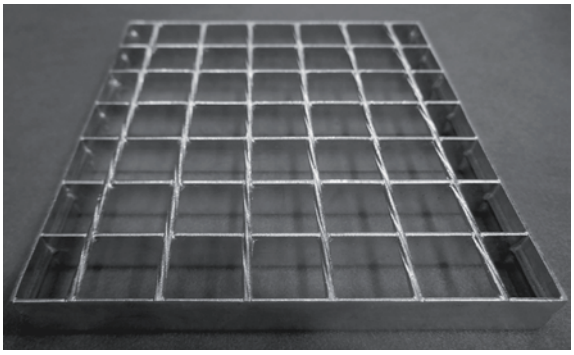

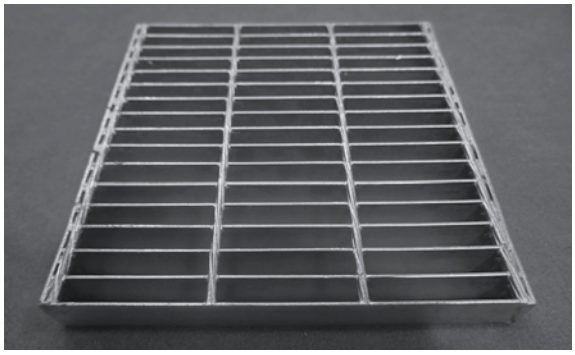

4.3. Transverse bar types

Transverse bar of the following types can be used in production of gratings:

- Twisted rectangular bars (diagonal 6 mm or 5 mm)
- Smooth transverse bars (4.8 mm or 5.8 mm)
- Grooved twisted transverse bar

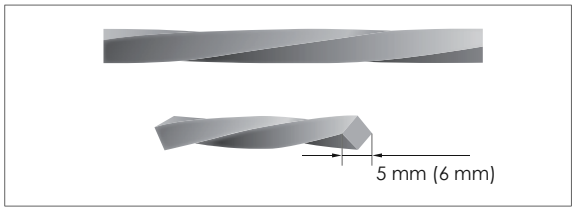

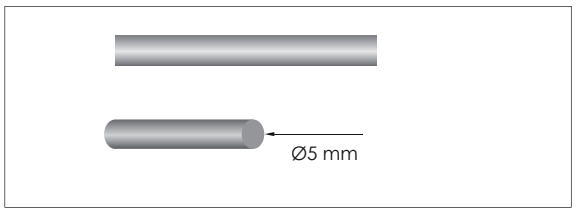

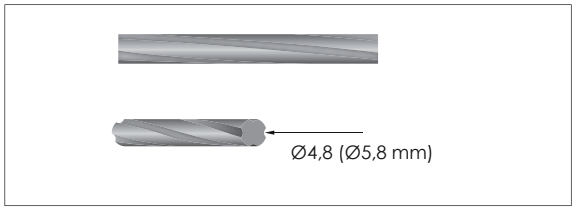

4.4. Grating types

4.4.1. Standard grating

Welded platform gratings are made from parallel-bearing flat bars that are joined transversally by-grooved rounded bars in such a way that those elements create one surface at the top of the grating.

Fig. 2. Standard grating

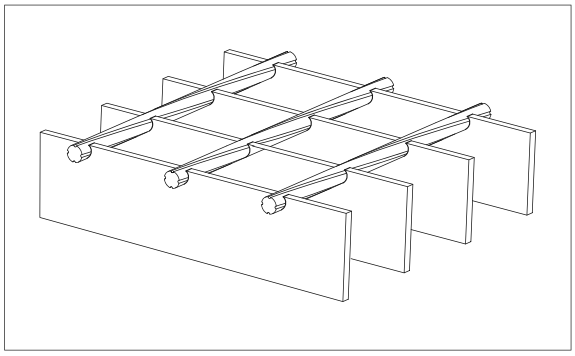

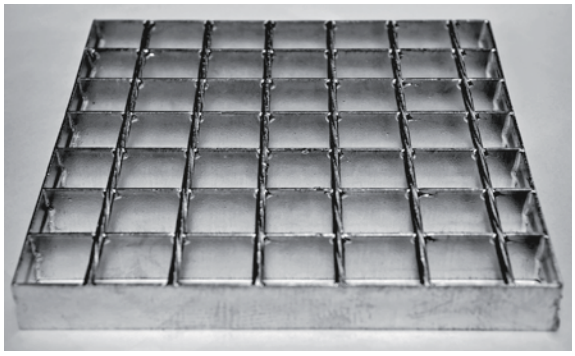

4.4.2. Serrated grating (SERR)

In case of a serrated grating, bearing flat bars with trapezoidal cuttings are used (Fig.4).
It is a grating with a higher nonslip level and this is why it is often used in particularly dangerous places, such as sloppy walkways, greasy floors and so forth.

Fig. 3 Serrated grating

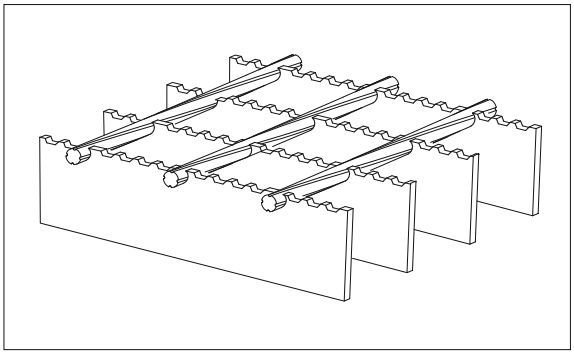

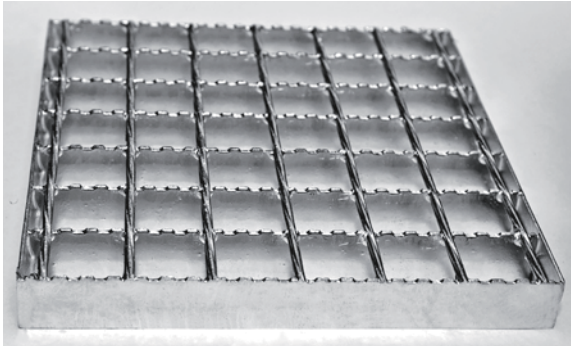

Fig 4. Serration parameters

trapezoid

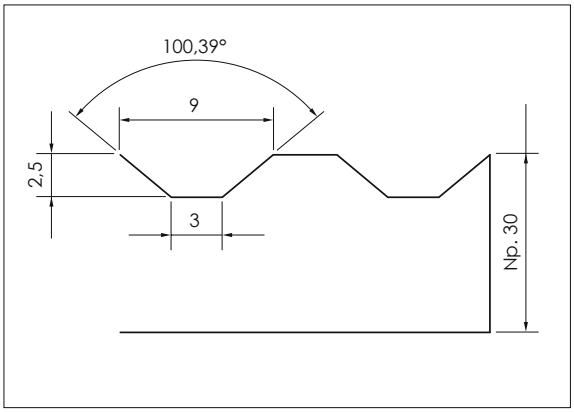

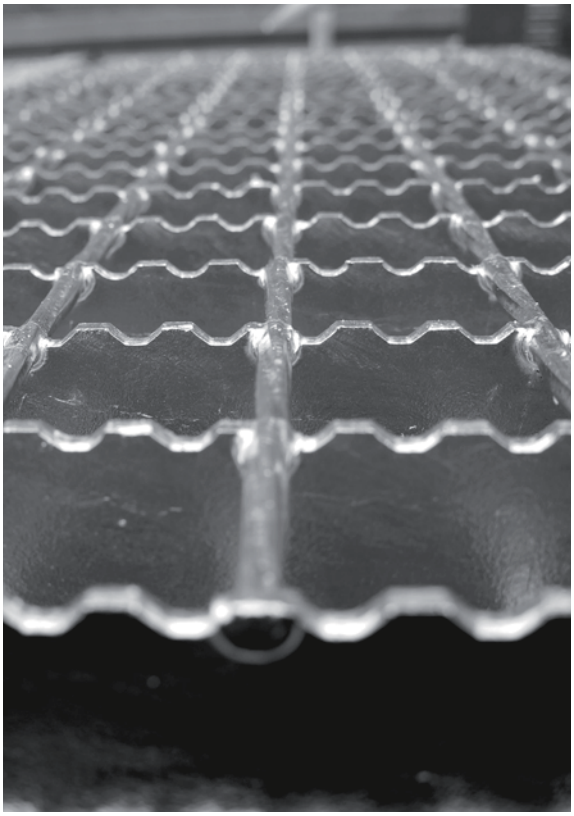

sawtooth

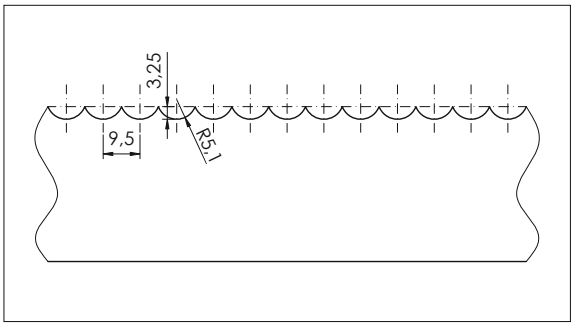

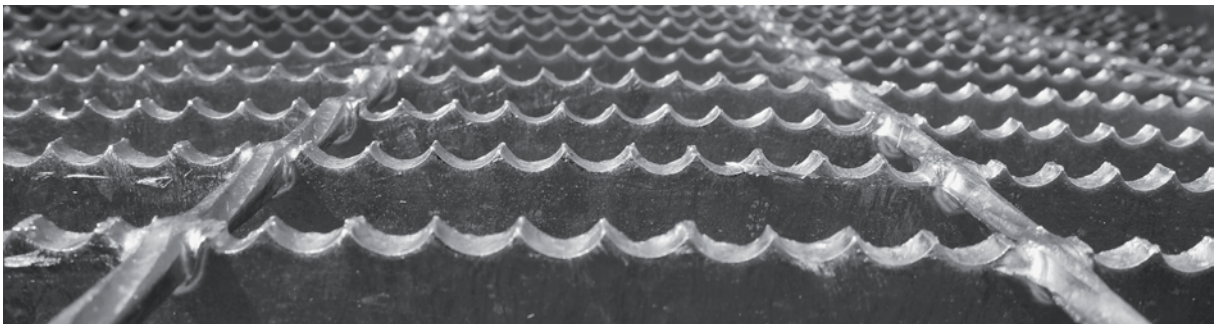

4.4.3. Security Mesh (SM) grating

A Security Mesh grating may be produced on the basis of a standard or a serrated grating by welding a flat bar of a thickness g=0.5mm and with openings 8mmx8mm at the bottom of the grating, between the bearing flat bars

Fig.5. Standard SM grating

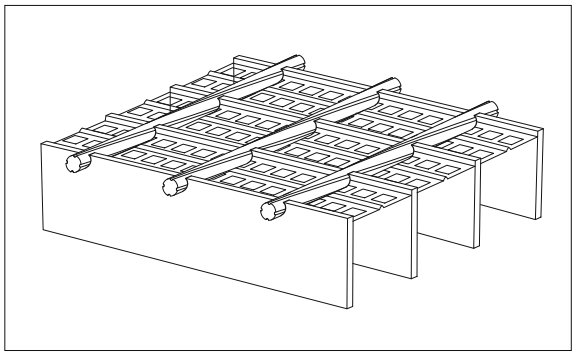

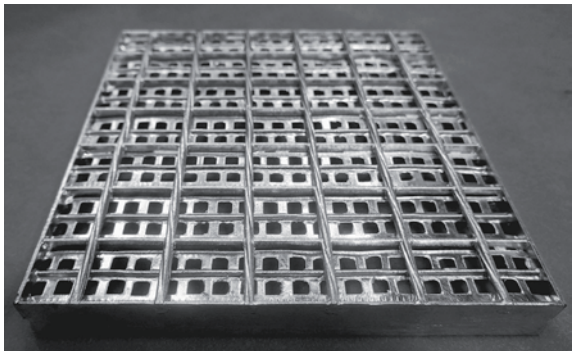

Fig. 6. Serrated SM grating

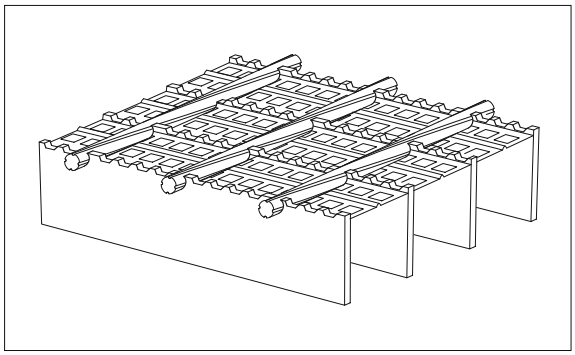

Fig. 7. Diagram of a Security Mesh flat bar

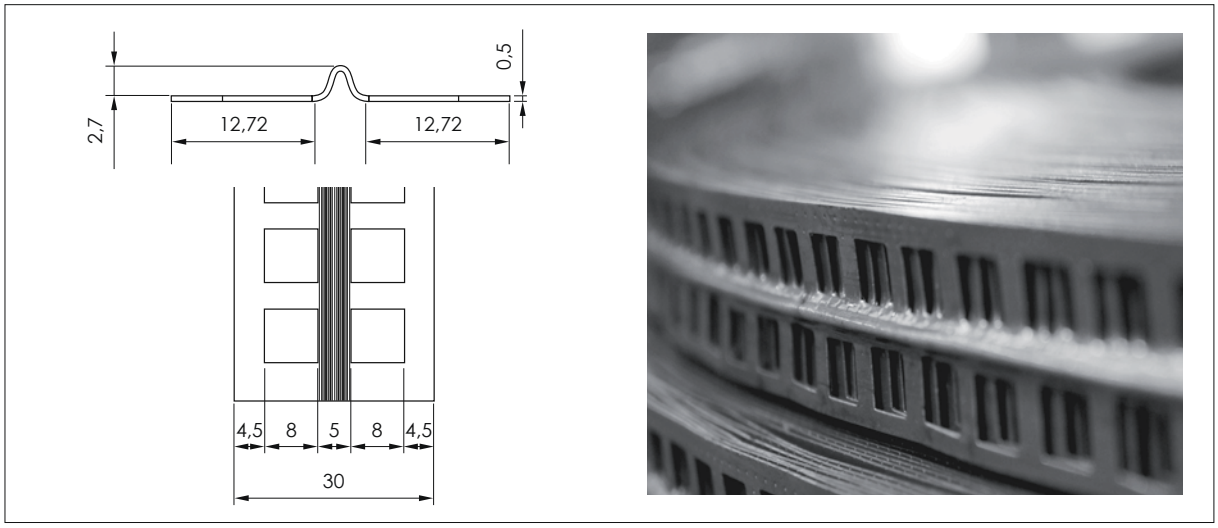

4.4.4. WBB grating

Grating type WBB can be made on the basis of a standard or a serrated grating by welding a grooved-bar 4.8mm in diameter at the bottom of it, between bearing flat bars

Fig. 8. Standard WBB grating

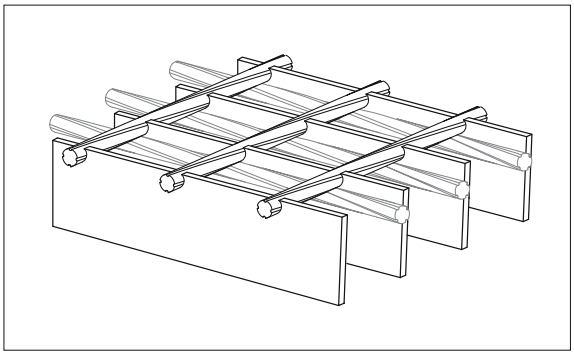

Fig. 9. Serrated WBB grating

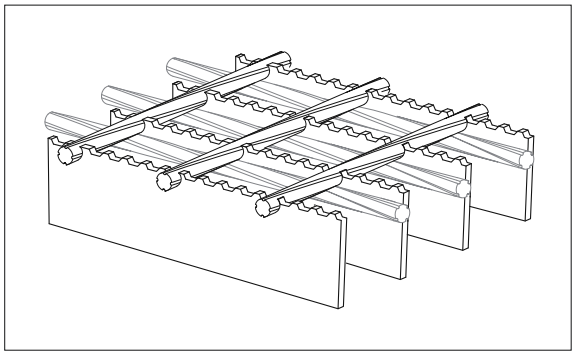

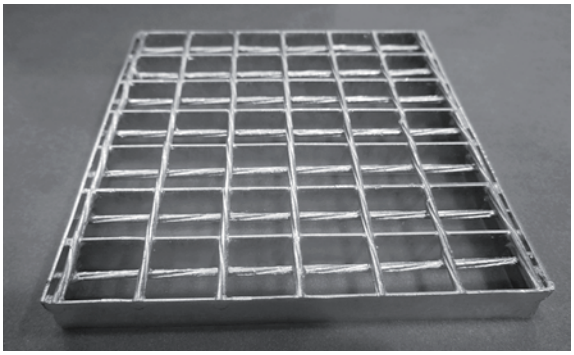

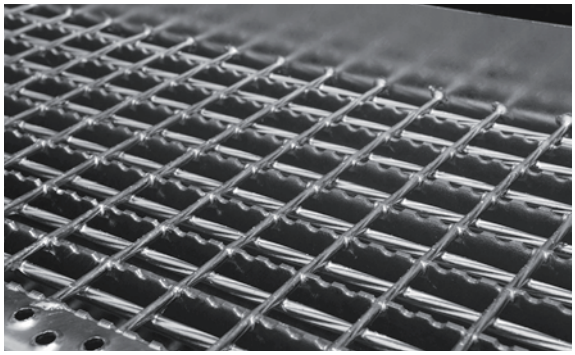

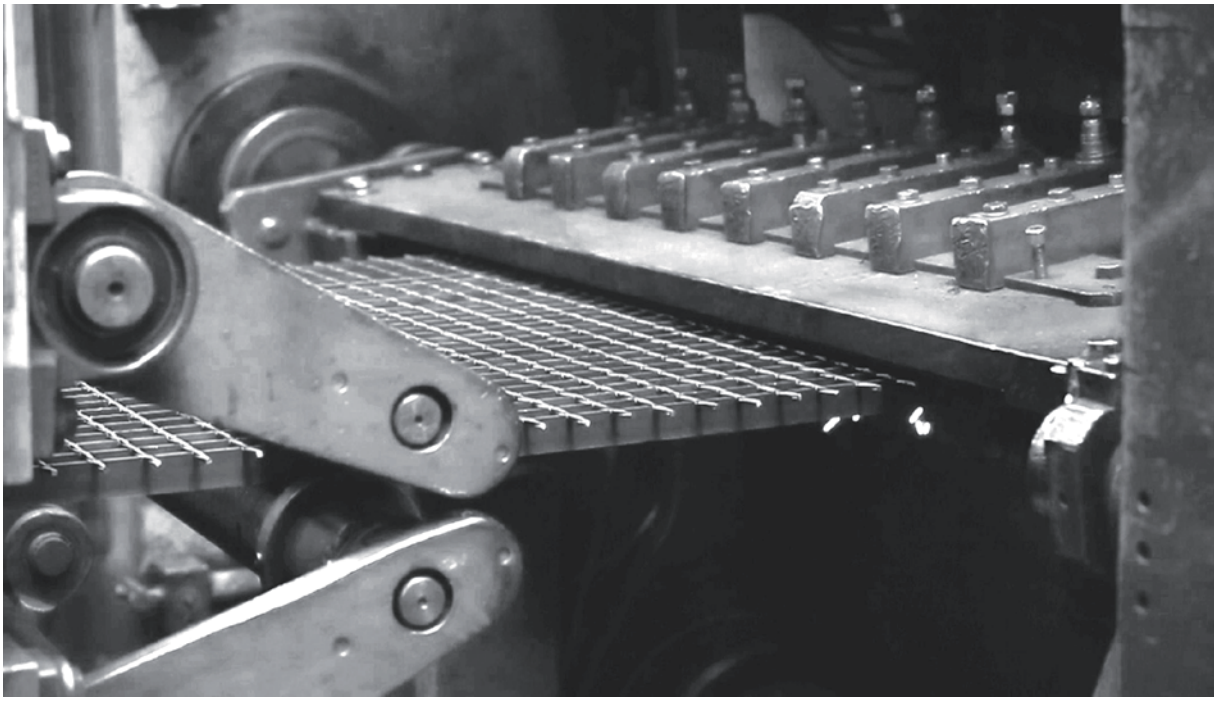

4.4.5. Special shapes (burnt – out) gratings

Burnt - out gratings are gratings of various shapes manufactured on a basis of a technical drawing. In case of burnt - out gratings (but not exclusively), it is possible to use the "sideboard" framing.
The sideboard may be made of a material of a thickness which not exceeding g=5 mm. When calculating parameters L and B, the smallest rectangular in which the given grate could be written in should be chosen, as shown in Figure 11.

Fig. 10. Grating with arc and straight lines

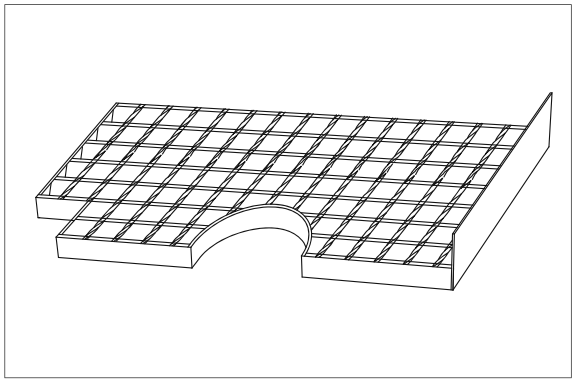

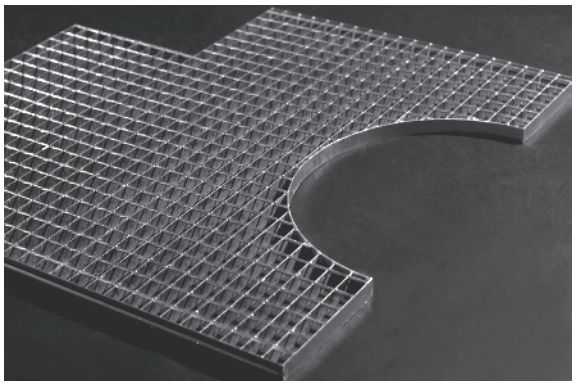

In case of stainless steel gratings, a rounded flat bar is used with a diameter Ø= 5 mm.

Fig. 11. Dimensioning of special shape grating

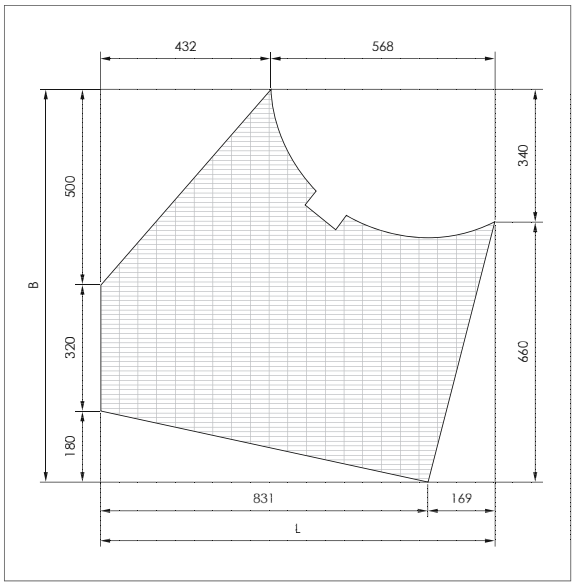

4.4.6. Gratings of special dimensions (XX and YY)

Grating type XX is characterised by symmetry towards parameter B. If the width of the grating is other than it should result from the size of the mesh, the extreme mesh ends size are the same, but not equal to 34,3 mm,
Grating type YY is characterised by symmetry towards parameter L. The ends of bearing bars (or of the frame) are all at the same distance from the closest transverse bar.

Fig. 12. Diagram of a XX and YY grating

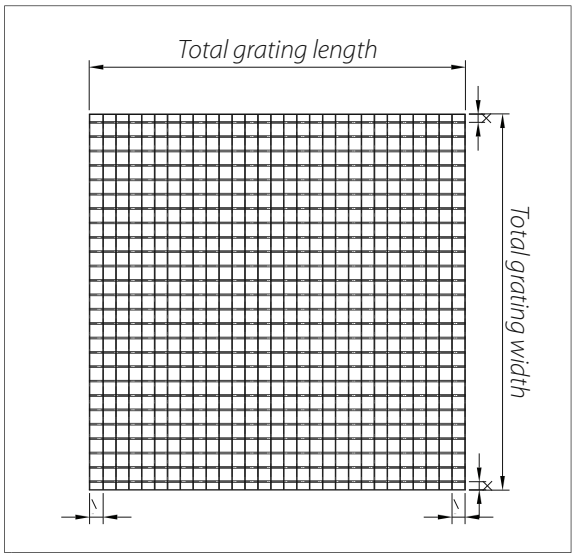

4.4.7. Stainless steel gratings

Thanks to its modern production lines, the TERMETAL Group also produces stainless steel gratings of the INOX 304 or INOX 316 type.

4.4.8. Production programme based on the graduation

Table 1. Grating production programme					
For graduation: a = 15,08 mm					
Flat bar height in mm	Thickness of a flat bar in mm				
	2	3	4	5	6
20	X	X			
25	X	X			
30	X	X			
40	X				
50					
60					
70					
For graduation: a = 30,15 mm					
20	X	X			
25	X	X			
30	X	X			
40	X				
50					
60					
70					
For graduation: a = 34,3 mm					
20	X	X	X	X	
25	X	X	X	X	
30	X	X	X	X	
40	X	X	X	X	
50		X	X	X	
60		X	X	X	
70				X	

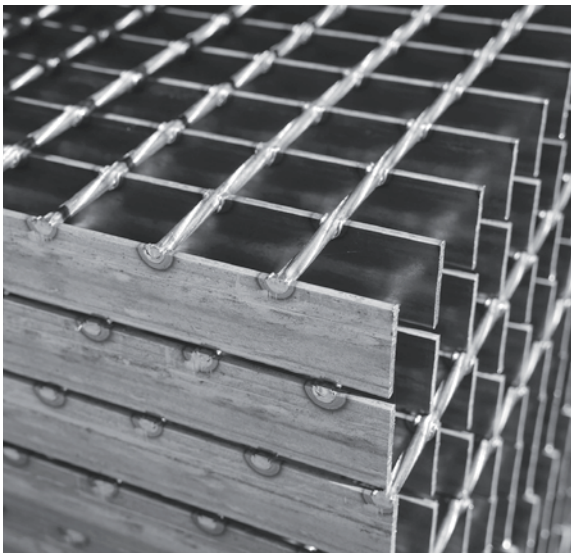

Table 2. Recommended grating widths for B#i000 mm resulting from the flat bar layout					
Number of bearing bars for graduation equal to 34.3 mm	Width of a grating at a flat bar thickness of				
	g = 2 mm	g = 3 mm	g = 4 mm	g = 5 mm	g = 6 mm
2	36	37	38	39	40
3	71	72	73	74	75
4	105	106	107	108	109
5	139	140	141	142	143
6	174	175	176	177	178
7	208	209	210	211	212
8	242	243	244	245	246
9	276	277	278	279	280
10	311	312	313	314	315
11	345	346	347	348	349
12	379	380	381	382	383
13	414	415	416	417	418
14	448	449	450	451	452
15	482	483	484	485	486
16	517	518	519	520	521
17	551	552	553	554	555
18	585	586	587	588	589
19	619	620	621	622	623
20	654	655	656	657	658
21	688	689	690	691	692
22	722	723	724	725	726
23	757	758	759	760	761
24	791	792	793	794	795
25	825	826	827	828	829
26	860	861	862	863	864
27	894	895	896	897	898
28	928	929	930	931	932
29	962	963	964	965	966
30	997	998	999	1000	1001

Worth knowing:	Tolerances for such widths +/- 3 mm.

4.5. Grating laying

4.5.1. Choosing grating width

In order to lower the costs of platform gratings, it is recommended to use a module of a width of B=1000. Then the largest possible surface of the platform should be covered with this module. The width of the final grating needed to cover the whole surface, should be calculated as a result of the previous activity. Using methods of averaging and unification of the width of the grating results in increased costs of covering the whole surface.

4.5.2. Grating support

When choosing grating support, the support-bearing bars should be laid down at a minimal height of at least the height of the bearing bar,- which should not be lower than 30 mm (for-example, for flat bars of 20 and 25 mm).

Fig. 13. Diagram of a platform grating support

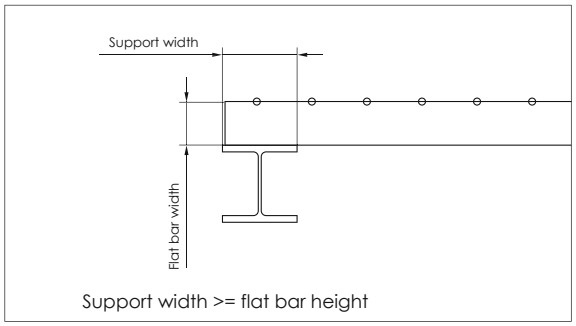

At the designing stage of the grating spacing, the following should be borne in mind:

- The distance between the gratings should amount to ~5 mm.

Fig. 14. Diagram of grating spacing

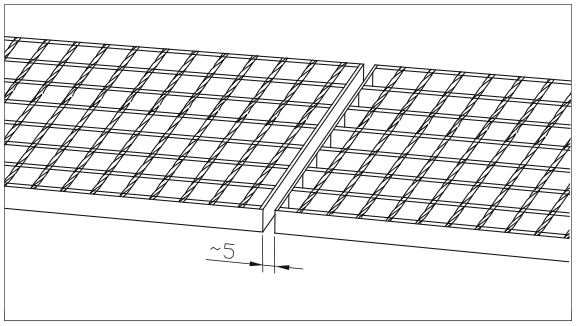

Worth knowing:	It should be remembered that gratings are normally made with negative tolerance values

- When laying down gratings on platforms, the distance between a grating and the platform edge should be around 10 mm.

Fig. 15. Diagram showing the distance between a grating and the platform edge

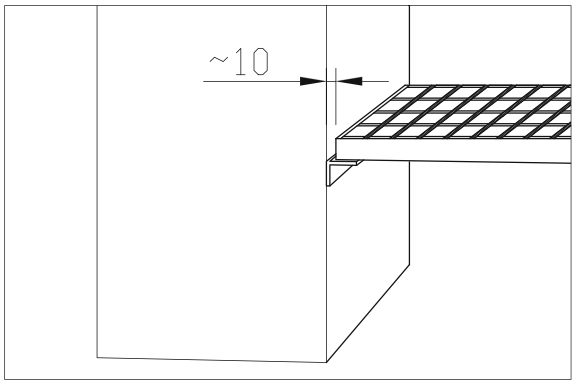

- In addition, in places where technological installations, such as bearing poles, pass through the grating, the distance should also be ~10 mm.

Fig. 16. Diagram showing a pole passing through a grating

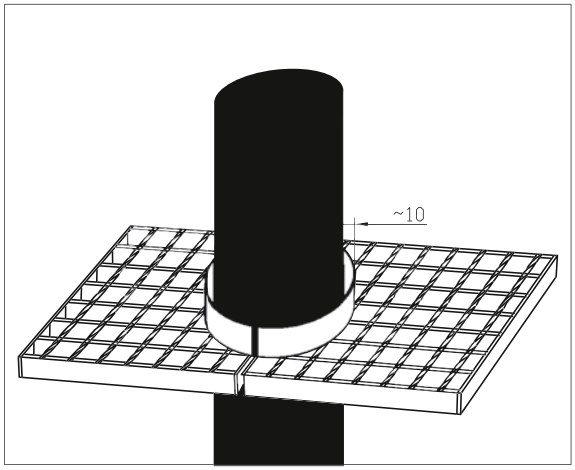

4.6. Strength tables

4.6.1. For a gap of a=34,3 mm

Table 3 shows loads for welded gratings with a graduation of a=34,3 mm and a distance between bars of 38.1 mm

Table 3. Tabele of a grating strength at a graduation of a=34,3 mm

Flat bars	para-metr	Length of grating (L) in mm																				
		500	600	700	800	900	1000	1100	1200	1300	1400	1500	1600	1700	1800	1900	2000	2100	2200	2300	2400	2500
20×2	Fv	1 990	1 382	1 015	777	614	498	411	346	294	254	221	194	172	154	138	124	113	103	94	86	80
	fv	0,20	0,29	0,39	0,51	0,64	0,79	0,96	1,14	1,34	1,56	1,79	2,03	2,29	2,57	2,87	3,17	3,50	3,84	4,20	4,57	4,96
	Fp	172	138	115	98	86	76	69	63	57	53	49	46	43	40	38	36	34	33	31	30	29
	fp	0,20	0,27	0,36	0,46	0,58	0,71	0,85	1,00	1,16	1,34	1,53	1,73	1,95	2,18	2,42	2,67	2,94	3,22	3,51	3,82	4,13
20×3	Fv	2 985	2 073	1 523	1 166	921	746	617	518	442	381	332	292	258	230	207	187	169	154	141	130	119
	fv	0,20	0,29	0,39	0,51	0,64	0,79	0,96	1,14	1,34	1,56	1,79	2,03	2,29	2,57	2,87	3,17	3,50	3,84	4,20	4,57	4,96
	Fp	258	206	172	148	129	115	103	94	86	80	74	69	64	61	58	54	52	49	47	45	43
	fp	0,20	0,27	0,36	0,46	0,58	0,71	0,85	1,00	1,16	1,34	1,53	1,73	1,95	2,18	2,42	2,67	2,94	3,22	3,51	3,82	4,13
25×2	Fv	3 110	2 160	1 587	1 215	960	777	643	540	460	397	346	304	269	240	215	194	176	161	147	135	124
	fv	0,16	0,23	0,31	0,41	0,51	0,63	0,77	0,91	1,07	1,24	1,43	1,63	1,83	2,06	2,29	2,54	2,80	3,07	3,36	3,66	3,97
	Fp	267	214	178	153	134	119	107	97	89	82	76	71	67	63	59	56	53	51	49	46	45
	fp	0,15	0,21	0,28	0,36	0,45	0,55	0,67	0,79	0,92	1,06	1,21	1,38	1,55	1,73	1,93	2,13	2,34	2,57	2,80	3,04	3,30
25×3	Fv	4 665	3 239	2 380	1 822	1 440	1 166	964	810	690	595	518	456	404	360	323	292	264	241	220	202	187
	fv	0,16	0,23	0,31	0,41	0,51	0,63	0,77	0,91	1,07	1,24	1,43	1,63	1,83	2,06	2,29	2,54	2,80	3,07	3,36	3,66	3,97
	Fp	401	321	267	229	201	178	160	146	134	123	115	107	100	94	89	84	80	76	73	70	67
	fp	0,15	0,21	0,28	0,36	0,45	0,55	0,67	0,79	0,92	1,06	1,21	1,38	1,55	1,73	1,93	2,13	2,34	2,57	2,80	3,04	3,30
25×4	Fv	6 220	4 319	3 173	2 430	1 920	1 555	1 285	1 080	920	793	691	607	538	480	431	389	353	321	294	270	249
	fv	0,16	0,23	0,31	0,41	0,51	0,63	0,77	0,91	1,07	1,24	1,43	1,63	1,83	2,06	2,29	2,54	2,80	3,07	3,36	3,66	3,97
	Fp	535	428	356	306	267	238	214	194	178	165	153	143	134	126	119	113	107	102	97	93	89
	fp	0,15	0,21	0,28	0,36	0,45	0,55	0,67	0,79	0,92	1,06	1,21	1,38	1,55	1,73	1,93	2,13	2,34	2,57	2,80	3,04	3,30
25×5	Fv	7 775	5 399	3 967	3 037	2 400	1 944	1 606	1 350	1 150	992	864	759	673	600	538	486	441	402	367	337	311
	fv	0,16	0,23	0,31	0,41	0,51	0,63	0,77	0,91	1,07	1,24	1,43	1,63	1,83	2,06	2,29	2,54	2,80	3,07	3,36	3,66	3,97
	Fp	668	535	446	382	334	297	267	243	223	206	191	178	167	157	149	141	134	127	122	116	111
	fp	0,15	0,21	0,28	0,36	0,45	0,55	0,67	0,79	0,92	1,06	1,21	1,38	1,55	1,73	1,93	2,13	2,34	2,57	2,80	3,04	3,30
25×6	Fv	9 329	6 479	4 760	3 644	2 879	2 332	1 928	1 620	1 380	1 190	1 037	911	807	720	646	583	529	482	441	405	373
	fv	0,16	0,23	0,31	0,41	0,51	0,63	0,77	0,91	1,07	1,24	1,43	1,63	1,83	2,06	2,29	2,54	2,80	3,07	3,36	3,66	3,97
	Fp	802	642	535	458	401	356	321	292	267	247	229	214	201	189	178	169	160	153	146	139	134
	fp	0,15	0,21	0,28	0,36	0,45	0,55	0,67	0,79	0,92	1,06	1,21	1,38	1,55	1,73	1,93	2,13	2,34	2,57	2,80	3,04	3,30
30×2	Fv	4 478	3 110	2 285	1 749	1 382	1 120	925	777	662	571	498	437	387	346	310	280	254	231	212	194	179
	fv	0,13	0,19	0,26	0,34	0,43	0,53	0,64	0,76	0,89	1,04	1,19	1,35	1,53	1,71	1,91	2,12	2,33	2,56	2,80	3,05	3,31
	Fp	382	306	255	218	191	170	153	139	127	118	109	102	96	90	85	80	76	73	69	66	64
	fp	0,12	0,17	0,23	0,30	0,38	0,46	0,55	0,66	0,77	0,88	1,01	1,15	1,29	1,44	1,60	1,77	1,95	2,14	2,33	2,54	2,75
30×3	Fv	6 717	4 665	3 427	2 624	2 073	1 679	1 388	1 166	994	857	746	656	581	518	465	420	381	347	317	292	269
	fv	0,13	0,19	0,26	0,34	0,43	0,53	0,64	0,76	0,89	1,04	1,19	1,35	1,53	1,71	1,91	2,12	2,33	2,56	2,80	3,05	3,31
	Fp	573	459	382	328	287	255	229	208	191	176	164	153	143	135	127	121	115	109	104	100	96
	fp	0,12	0,17	0,23	0,30	0,38	0,46	0,55	0,66	0,77	0,88	1,01	1,15	1,29	1,44	1,60	1,77	1,95	2,14	2,33	2,54	2,75
30×4	Fv	8 956	6 220	4 570	3 499	2 764	2 239	1 850	1 555	1 325	1 142	995	875	775	691	620	560	508	463	423	389	358
	fv	0,13	0,19	0,26	0,34	0,43	0,53	0,64	0,76	0,89	1,04	1,19	1,35	1,53	1,71	1,91	2,12	2,33	2,56	2,80	3,05	3,31
	Fp	764	611	509	437	382	340	306	278	255	235	218	204	191	180	170	161	153	146	139	133	127
	fp	0,12	0,17	0,23	0,30	0,38	0,46	0,55	0,66	0,77	0,88	1,01	1,15	1,29	1,44	1,60	1,77	1,95	2,14	2,33	2,54	2,75
30×5	Fv	11 195	7 775	5 712	4 373	3 455	2 799	2 313	1 944	1 656	1 428	1 244	1 093	968	864	775	700	635	578	529	486	448
	fv	0,13	0,19	0,26	0,34	0,43	0,53	0,64	0,76	0,89	1,04	1,19	1,35	1,53	1,71	1,91	2,12	2,33	2,56	2,80	3,05	3,31
	Fp	955	764	637	546	478	425	382	347	318	294	273	255	239	225	212	201	191	182	174	166	159
	fp	0,12	0,17	0,23	0,30	0,38	0,46	0,55	0,66	0,77	0,88	1,01	1,15	1,29	1,44	1,60	1,77	1,95	2,14	2,33	2,54	2,75
30×6	Fv	13434	9 329	6 854	5 248	4 146	3 359	2 776	2 332	1 987	1 714	1 493	1 312	1 162	1 037	930	840	762	694	635	583	537
	fv	0,13	0,19	0,26	0,34	0,43	0,53	0,64	0,76	0,89	1,04	1,19	1,35	1,53	1,71	1,91	2,12	2,33	2,56	2,80	3,05	3,31
	Fp	1 146	917	764	655	573	509	459	417	382	353	328	306	287	270	255	241	229	218	208	199	191
	fp	0,12	0,17	0,23	0,30	0,38	0,46	0,55	0,66	0,77	0,88	1,01	1,15	1,29	1,44	1,60	1,77	1,95	2,14	2,33	2,54	2,75
40×2	Fv	7961	5 529	4 062	3 110	2 457	1 990	1 645	1 382	1 178	1 015	885	777	689	614	551	498	451	411	376	346	318
	fv	0,10	0,14	0,19	0,25	0,32	0,40	0,48	0,57	0,67	0,78	0,89	1,02	1,15	1,29	1,43	1,59	1,75	1,92	2,10	2,29	2,48
	Fp	668	535	445	382	334	297	267	243	223	206	191	178	167	157	148	141	134	127	121	116	111
	fp	0,09	0,13	0,17	0,23	0,28	0,35	0,42	0,49	0,57	0,66	0,76	0,86	0,97	1,08	1,20	1,33	1,46	1,60	1,75	1,90	2,06
40×3	Fv	11 942	8 293	6 093	4 665	3 686	2 985	2 467	2 073	1 767	1 523	1 327	1 166	1 033	921	827	746	677	617	564	518	478
	fv	0,10	0,14	0,19	0,25	0,32	0,40	0,48	0,57	0,67	0,78	0,89	1,02	1,15	1,29	1,43	1,59	1,75	1,92	2,10	2,29	2,48
	Fp	1 002	802	668	573	501	445	401	364	334	308	286	267	251	236	223	211	200	191	182	174	167
	fp	0,09	0,13	0,17	0,23	0,28	0,35	0,42	0,49	0,57	0,66	0,76	0,86	0,97	1,08	1,20	1,33	1,46	1,60	1,75	1,90	2,06
40×4	Fv	15 922	11 057	8 124	6 220	4 914	3 981	3 290	2 764	2 355	2 031	1 769	1 555	1 377	1 229	1 103	995	903	822	752	691	637
	fv	0,10	0,14	0,19	0,25	0,32	0,40	0,48	0,57	0,67	0,78	0,89	1,02	1,15	1,29	1,43	1,59	1,75	1,92	2,10	2,29	2,48
	Fp	1 336	1 069	891	764	668	594	535	486	445	411	382	356	334	314	297	281	267	255	243	232	223
	fp	0,09	0,13	0,17	0,23	0,28	0,35	0,42	0,49	0,57	0,66	0,76	0,86	0,97	1,08	1,20	1,33	1,46	1,60	1,75	1,90	2,06
40×5	Fv	19 903	13 821	10 154	7 775	6 143	4 976	4 112	3 455	2 944	2 539	2 211	1 944	1 722	1 536	1 378	1 244	1 128	1 028	941	864	796
	fv	0,10	0,14	0,19	0,25	0,32	0,40	0,48	0,57	0,67	0,78	0,89	1,02	1,15	1,29	1,43	1,59	1,75	1,92	2,10	2,29	2,48
	Fp	1 671	1 336	1 114	955	835	742	668	607	557	514	477	445	418	393	371	352	334	318	304	291	278
	fp	0,09	0,13	0,17	0,23	0,28	0,35	0,42	0,49	0,57	0,66	0,76	0,86	0,97	1,08	1,20	1,33	1,46	1,60	1,75	1,90	2,06
40×6	Fv	23 883	16 586	12 185	9 329	7 371	5 971	4 935	4 146	3 533	3 046	2 654	2 332	2 066	1 843	1 654	1 493	1 354	1 234	1 129	1 037	955
	fv	0,10	0,14	0,19	0,25	0,32	0,40	0,48	0,57	0,67	0,78	0,89	1,02	1,15	1,29	1,43	1,59	1,75	1,92	2,10	2,29	2,48
	Fp	2 005	1 604	1 336	1 146	1 002	891	802	729	668	617	573	535	501	472	445	422	401	382	364	349	334
	fp	0,09	0,13	0,17	0,23	0,28	0,35	0,42	0,49	0,57	0,66	0,76	0,86	0,97	1,08	1,20	1,33	1,46	1,60	1,75	1,90	2,06
40×2	Fv	7961	5 529	4 062	3 110	2 457	1 990	1 645	1 382	1 178	1 015	885	777	689	614	551	498	451	411	376	346	318
	fv	0,10	0,14	0,19	0,25	0,32	0,40	0,48	0,57	0,67	0,78	0,89	1,02	1,15	1,29	1,43	1,59	1,75	1,92	2,10	2,29	2,48
	Fp	668	535	445	382	334	297	267	243	223	206	191	178	167	157	148	141	134	127	121	116	111
	fp	0,09	0,13	0,17	0,23	0,28	0,35	0,42	0,49	0,57	0,66	0,76	0,86	0,97	1,08	1,20	1,33	1,46	1,60	1,75	1,90	2,06

Platform gratings

Table 3. Tabele of a grating strength at graduationf a=34,3 mm																							
Flat bar	para-metr	Length of the grating (L) in mm																					
		500	600	700	800	900	1000	1100	1200	1300	1400	1500	1600	1700	1800	1900	2000	2100	2200	2300	2400	2500
50×2	Fv	12 439	8 638	6 347	4 859	3 839	3 110	2 570	2 160	1 840	1 587	1 382	1 215	1 076	960	861	777	705	643	588	540	498
	fv	0,08	0,11	0,16	0,20	0,26	0,32	0,38	0,46	0,54	0,62	0,71	0,81	0,92	1,03	1,15	1,27	1,40	1,54	1,68	1,83	1,98
	Fp	1 028	822	685	587	514	457	411	374	343	316	294	274	257	242	228	216	206	196	187	179	171
	fp	0,07	0,10	0,14	0,18	0,23	0,28	0,33	0,39	0,46	0,53	0,61	0,69	0,77	0,87	0,96	1,06	1,17	1,28	1,40	1,52	1,65
50×3	Fv	18 659	12 958	9 520	7 289	5 759	4 665	3 855	3 239	2 760	2 380	2 073	1 822	1 614	1 440	1 292	1 166	1 058	964	882	810	746
	fv	0,08	0,11	0,16	0,20	0,26	0,32	0,38	0,46	0,54	0,62	0,71	0,81	0,92	1,03	1,15	1,27	1,40	1,54	1,68	1,83	1,98
	Fp	1 542	1 234	1 028	881	771	685	617	561	514	475	441	411	386	363	343	325	308	294	280	268	257
	fp	0,07	0,10	0,14	0,18	0,23	0,28	0,33	0,39	0,46	0,53	0,61	0,69	0,77	0,87	0,96	1,06	1,17	1,28	1,40	1,52	1,65
50×4	Fv	24 879	17 277	12 693	9 718	7 679	6 220	5 140	4 319	3 680	3 173	2 764	2 430	2 152	1 920	1 723	1 555	1 410	1 285	1 176	1 080	995
	fv	0,08	0,11	0,16	0,20	0,26	0,32	0,38	0,46	0,54	0,62	0,71	0,81	0,92	1,03	1,15	1,27	1,40	1,54	1,68	1,83	1,98
	Fp	2 056	1 645	1 371	1 175	1 028	914	822	748	685	633	587	548	514	484	457	433	411	392	374	358	343
	fp	0,07	0,10	0,14	0,18	0,23	0,28	0,33	0,39	0,46	0,53	0,61	0,69	0,77	0,87	0,96	1,06	1,17	1,28	1,40	1,52	1,65
50×5	Fv	31 098	21 596	15 866	12 148	9 598	7 775	6 425	5 399	4 600	3 967	3 455	3 037	2 690	2 400	2 154	1 944	1 763	1 606	1 470	1 350	1 244
	fv	0,08	0,11	0,16	0,20	0,26	0,32	0,38	0,46	0,54	0,62	0,71	0,81	0,92	1,03	1,15	1,27	1,40	1,54	1,68	1,83	1,98
	Fp	2 570	2 056	1 714	1 469	1 285	1 142	1 028	935	857	791	734	685	643	605	571	541	514	490	467	447	428
	fp	0,07	0,10	0,14	0,18	0,23	0,28	0,33	0,39	0,46	0,53	0,61	0,69	0,77	0,87	0,96	1,06	1,17	1,28	1,40	1,52	1,65
50×6	Fv	37 318	25 915	19 040	14 577	11 518	9 329	7 710	6 479	5 520	4 760	4 146	3 644	3 228	2 879	2 584	2 332	2 116	1 928	1 764	1 620	1 493
	fv	0,08	0,11	0,16	0,20	0,26	0,32	0,38	0,46	0,54	0,62	0,71	0,81	0,92	1,03	1,15	1,27	1,40	1,54	1,68	1,83	1,98
	Fp	3 084	2 467	2 056	1 762	1 542	1 371	1 234	1 122	1 028	949	881	822	771	726	685	649	617	587	561	536	514
	fp	0,07	0,10	0,14	0,18	0,23	0,28	0,33	0,39	0,46	0,53	0,61	0,69	0,77	0,87	0,96	1,06	1,17	1,28	1,40	1,52	1,65
60×2	Fv	17 913	12 439	9 139	6 997	5 529	4 478	3 701	3 110	2 650	2 285	1 990	1 749	1 550	1 382	1 240	1 120	1 015	925	847	777	717
	fv	0,07	0,10	0,13	0,17	0,21	0,26	0,32	0,38	0,45	0,52	0,60	0,68	0,76	0,86	0,96	1,06	1,17	1,28	1,40	1,52	1,65
	Fp	1 456	1 164	970	832	728	647	582	529	485	448	416	388	364	342	323	306	291	277	265	253	243
	fp	0,06	0,09	0,12	0,15	0,19	0,23	0,28	0,33	0,38	0,44	0,51	0,57	0,65	0,72	0,80	0,89	0,98	1,07	1,17	1,27	1,37
60×3	Fv	26 869	18 659	13 709	10 496	8 293	6 717	5 551	4 665	3 975	3 427	2 985	2 624	2 324	2 073	1 861	1 679	1 523	1 388	1 270	1 166	1 075
	fv	0,07	0,10	0,13	0,17	0,21	0,26	0,32	0,38	0,45	0,52	0,60	0,68	0,76	0,86	0,96	1,06	1,17	1,28	1,40	1,52	1,65
	Fp	2 183	1 747	1 456	1 248	1 092	970	873	794	728	672	624	582	546	514	485	460	437	416	397	380	364
	fp	0,06	0,09	0,12	0,15	0,19	0,23	0,28	0,33	0,38	0,44	0,51	0,57	0,65	0,72	0,80	0,89	0,98	1,07	1,17	1,27	1,37
60×4	Fv	35 825	24 879	18 278	13 994	11 057	8 956	7 402	6 220	5 300	4 570	3 981	3 499	3 099	2 764	2 481	2 239	2 031	1 850	1 693	1 555	1 433
	fv	0,07	0,10	0,13	0,17	0,21	0,26	0,32	0,38	0,45	0,52	0,60	0,68	0,76	0,86	0,96	1,06	1,17	1,28	1,40	1,52	1,65
	Fp	2 911	2 329	1 941	1 663	1 456	1 294	1 164	1 059	970	896	832	776	728	685	647	613	582	554	529	506	485
	fp	0,06	0,09	0,12	0,15	0,19	0,23	0,28	0,33	0,38	0,44	0,51	0,57	0,65	0,72	0,80	0,89	0,98	1,07	1,17	1,27	1,37
60×5	Fv	44 781	31 098	22 848	17 493	13 821	11 195	9 252	7 775	6 624	5 712	4 976	4 373	3 874	3 455	3 101	2 799	2 539	2 313	2 116	1 944	1 791
	fv	0,07	0,10	0,13	0,17	0,21	0,26	0,32	0,38	0,45	0,52	0,60	0,68	0,76	0,86	0,96	1,06	1,17	1,28	1,40	1,52	1,65
	Fp	3 639	2 911	2 426	2 079	1 819	1 617	1 456	1 323	1 213	1 120	1 040	970	910	856	809	766	728	693	662	633	606
	fp	0,06	0,09	0,12	0,15	0,19	0,23	0,28	0,33	0,38	0,44	0,51	0,57	0,65	0,72	0,80	0,89	0,98	1,07	1,17	1,27	1,37
60×6	Fv	53 738	37 318	27 417	20 991	16 586	13 434	11 103	9 329	7 949	6 854	5 971	5 248	4 649	4 146	3 721	3 359	3 046	2 776	2 540	2 332	2 150
	fv	0,07	0,10	0,13	0,17	0,21	0,26	0,32	0,38	0,45	0,52	0,60	0,68	0,76	0,86	0,96	1,06	1,17	1,28	1,40	1,52	1,65
	Fp	4 367	3 493	2 911	2 495	2 183	1 941	1 747	1 588	1 456	1 344	1 248	1 164	1 092	1 027	970	919	873	832	794	759	728
	fp	0,06	0,09	0,12	0,15	0,19	0,23	0,28	0,33	0,38	0,44	0,51	0,57	0,65	0,72	0,80	0,89	0,98	1,07	1,17	1,27	1,37
70×2	Fv	24 381	16 931	12 439	9 524	7 525	6 095	5 037	4 233	3 607	3 110	2 709	2 381	2 109	1 881	1 688	1 524	1 382	1 259	1 152	1 058	975
	fv	0,06	0,08	0,11	0,15	0,18	0,23	0,27	0,33	0,38	0,44	0,51	0,58	0,66	0,73	0,82	0,91	1,00	1,10	1,20	1,31	1,42
	Fp	1 950	1 560	1 300	1 114	975	867	780	709	650	600	557	520	487	459	433	410	390	371	355	339	325
	fp	0,05	0,07	0,10	0,13	0,16	0,20	0,24	0,28	0,33	0,38	0,43	0,49	0,55	0,62	0,69	0,76	0,84	0,92	1,00	1,09	1,18
70×3	Fv	36 571	25 397	18 659	14 286	11 287	9 143	7 556	6 349	5 410	4 665	4 063	3 571	3 164	2 822	2 533	2 286	2 073	1 889	1 728	1 587	1 463
	fv	0,06	0,08	0,11	0,15	0,18	0,23	0,27	0,33	0,38	0,44	0,51	0,58	0,66	0,73	0,82	0,91	1,00	1,10	1,20	1,31	1,42
	Fp	2 925	2 340	1 950	1 671	1 462	1 300	1 170	1 064	975	900	836	780	731	688	650	616	585	557	532	509	487
	fp	0,05	0,07	0,10	0,13	0,16	0,20	0,24	0,28	0,33	0,38	0,43	0,49	0,55	0,62	0,69	0,76	0,84	0,92	1,00	1,09	1,18
70×4	Fv	48 762	33 862	24 879	19 048	15 050	12 190	10 075	8 466	7 213	6 220	5 418	4 762	4 218	3 762	3 377	3 048	2 764	2 519	2 304	2 116	1 950
	fv	0,06	0,08	0,11	0,15	0,18	0,23	0,27	0,33	0,38	0,44	0,51	0,58	0,66	0,73	0,82	0,91	1,00	1,10	1,20	1,31	1,42
	Fp	3 900	3 120	2 600	2 228	1 950	1 733	1 560	1 418	1 300	1 200	1 114	1 040	975	918	867	821	780	743	709	678	650
	fp	0,05	0,07	0,10	0,13	0,16	0,20	0,24	0,28	0,33	0,38	0,43	0,49	0,55	0,62	0,69	0,76	0,84	0,92	1,00	1,09	1,18
70×5	Fv	60 952	42 328	31 098	23 810	18 812	15 238	12 593	10 582	9 017	7 775	6 772	5 952	5 273	4 703	4 221	3 810	3 455	3 148	2 881	2 646	2 438
	fv	0,06	0,08	0,11	0,15	0,18	0,23	0,27	0,33	0,38	0,44	0,51	0,58	0,66	0,73	0,82	0,91	1,00	1,10	1,20	1,31	1,42
	Fp	4 874	3 900	3 250	2 785	2 437	2 166	1 950	1 773	1 625	1 500	1 393	1 300	1 219	1 147	1 083	1 026	975	928	886	848	812
	fp	0,05	0,07	0,10	0,13	0,16	0,20	0,24	0,28	0,33	0,38	0,43	0,49	0,55	0,62	0,69	0,76	0,84	0,92	1,00	1,09	1,18
70×6	Fv	73 143	50 794	37 318	28 571	22 575	18 286	15 112	12 698	10 820	9 329	8 127	7 143	6 327	5 644	5 065	4 571	4 146	3 778	3 457	3 175	2 926
	fv	0,06	0,08	0,11	0,15	0,18	0,23	0,27	0,33	0,38	0,44	0,51	0,58	0,66	0,73	0,82	0,91	1,00	1,10	1,20	1,31	1,42
	Fp	5 849	4 679	3 900	3 342	2 925	2 600	2 340	2 127	1 950	1 800	1 671	1 560	1 462	1 376	1 300	1 231	1 170	1 114	1 064	1 017	975
	fp	0,05	0,07	0,10	0,13	0,16	0,20	0,24	0,28	0,33	0,38	0,43	0,49	0,55	0,62	0,69	0,76	0,84	0,92	1,00	1,09	1,18

Table 3 - legend:

Fv – continuous load in daN/2,
fv – bend deflection from deflection Fv,
Fp – load concentrated on a surface of 200x200 mm, daN
fp – bend deflection from deflection Fp,

4.6.2. For a gap of a=15,08 mm; a=30,15 mm

A calculation chart of the carrying capacity of platform gratings with bearing bars height h = (20+30) mm, and with a distance between bearing bars amounting to a = 30,15 mm

Fv – continuous load, daN/m2
Fp – load concentrated on a surface of 200x200 mm, daN
fv – deflection caused by load Fv, cm
fp – deflection caused by load Fp, cm

Formula:

Tabela 4. Load index for calculations for gratings with graduation amountingt o a=30,15 and a=15,075		
Gap:	a=15,1	a=30,2
Indexes for calculation of Fv:	2,3	1,2
Indexes for calculation of Fp:	2,6	1,13

Table 4 - legend:

Fv – continuous load, daN/m2
Fp – load concentrated on a surface of 200x200 mm, daN

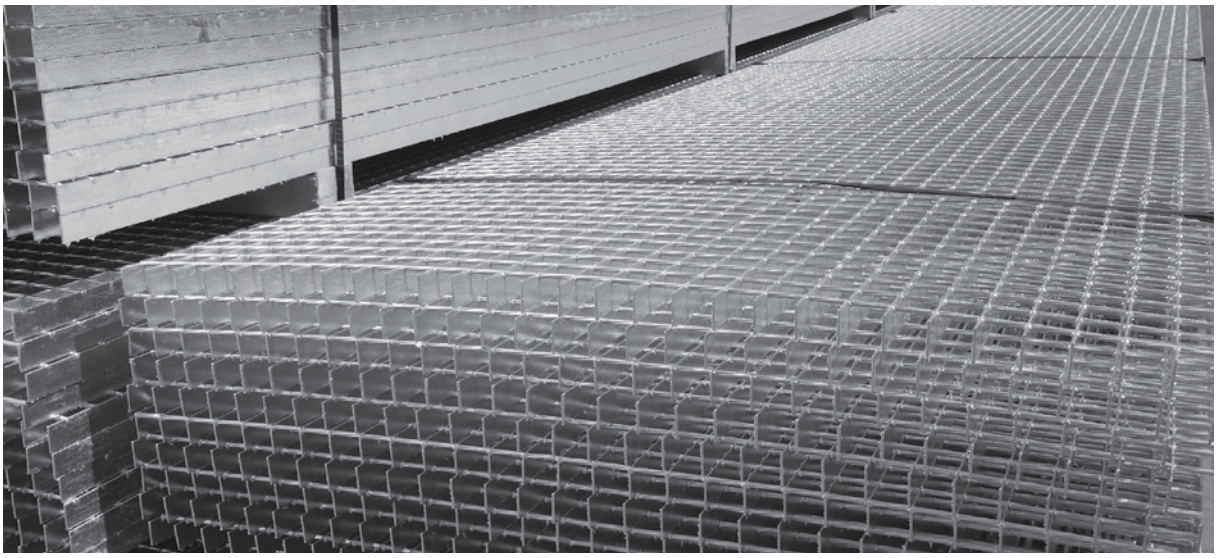

Platform gratings

4.7. Grating manufacturing tolerances

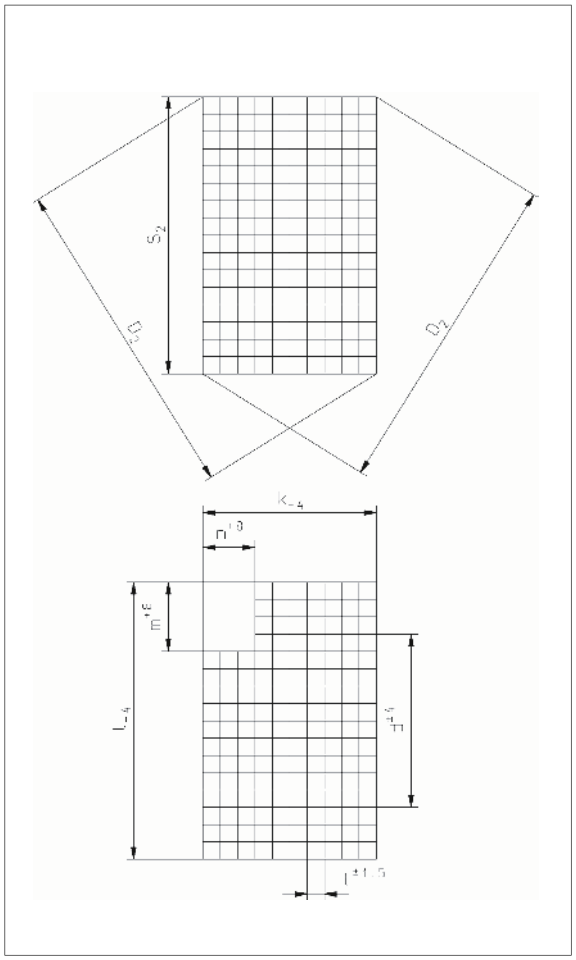

Worth knowing:	Allowed dimensional deviations - measurements for 10 mesh elements

Allowed tolerances for platform gratings (for gratings without loads)

Fig. 17. Diagram of a bow deviation

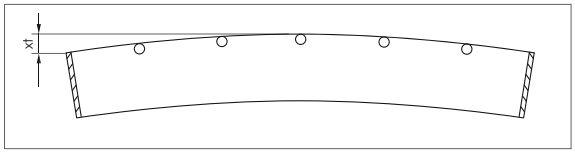

Worth knowing:	Bow deviation (xt) max = 1/150 of the length; at a size of > 450 mm - max 8 mm; for sizes < 450 mm - max 3 mm

Fig. 18. Diagram of a concavity deviation

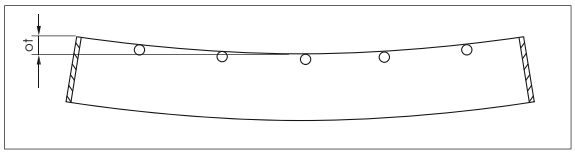

Worth knowing:	Concavity deviation (ot) max = 1/200 of the length; at a size > 600 mm - max 8 mm; for sizes <600 mm - max 3 mm

Fig. 19. Diagram of a bow deviation

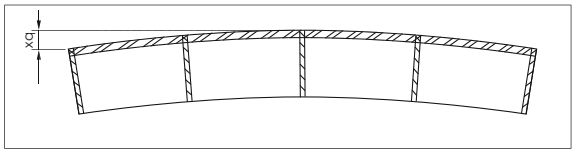

Worth knowing:	Bow deviation (xq)= max = 1/150 of the length; at a size of > 450 mm - max 8 mm; for sizes < 450 mm - max 3 mm

Fig. 20. Diagram of a concavity deviation

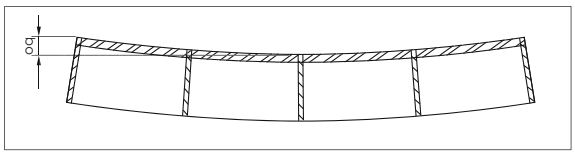

Worth knowing:	Concavity deviation (oq) max = 1/200 of the length; at a size > 600 mm - max 8 mm; for sizes <600 mm - max 3 mm

Fig. 21. An out-rigging transverse bar or a framing bar

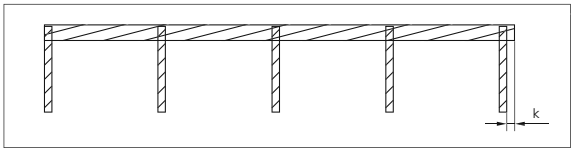

Worth knowing:	An out-rigging transverse bar or a framing bar k_{max} = 0,5 mm

Fig. 22. Tilting of bearing bars and frames

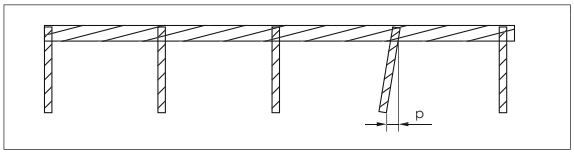

Worth knowing:	Tilting of bearing bars and frames pmax = 0,1 x h maximum 3 mm

Fig. 23. Haunch of a bearing bar cutting in relation to a transverse bar

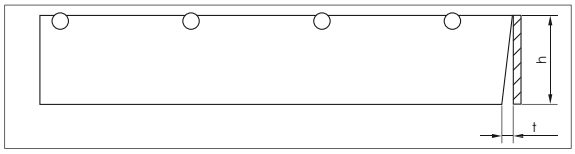

Worth knowing:	Haunch of a bearing bar cutting in relation to a trans-verse bar kmax = 0,5 mm bar t_{max} = ±0,1 x h, max 3 mm

RFig. 24. Out-rigging transverse bars

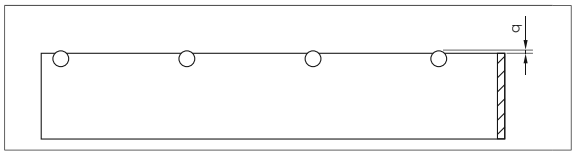

Worth knowing:	Out-rigging transverse bars q_{max} = 1,5 mm

Fig. 25. Out-rigging edge heading upwards

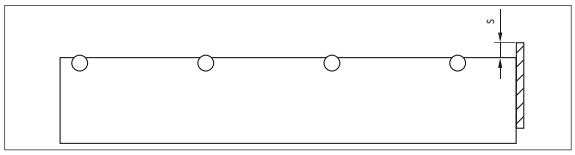

Worth knowing:	Out-rigging edge heading upwards s_{max}= 1,0 mm

Fig. 26. Out-rigging edge heading downwards

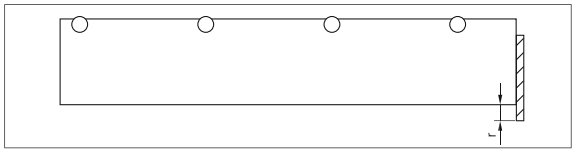

Worth knowing:	Out-rigging edge heading downwards r_{max} = 1,0 mm

5. Stair treads

A stair tread may be built on the basis of platform gratings STD, SERR, SM, WBB, SERR-WBB, SERR-SM, except that it will be equipped with a special side framing which allows for quick assembly of the bearing structure ("the step side"). It is also equipped with a nonslip front panel thanks to the special perforation on its top.

Worth knowing:	Tolerances for parameter B + / - 5 mm Tolerances for parameter L + 0/-4 mm

Fig. 27. STD step

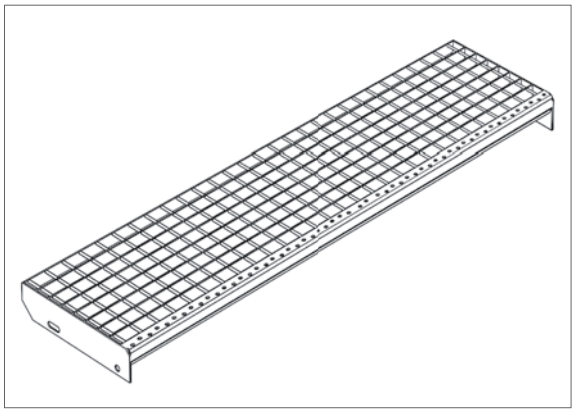

Table 5. Typical sizes of steps(mm)																									
L	600					800					900					1000					1200				
B	205	240	270	295	305	205	240	270	295	305	205	240	270	295	305	205	240	270	295	305	205	240	270	295	305
h	Type of bearing flat bar																								
n	120	120	150	180	180	120	120	150	180	180	120	120	150	180	180	120	120	150	180	180	120	120	150	180	180

5.1. Construction of a stair tread

Termetal offers various types of stair treads whose classification is based on their finishing elements:

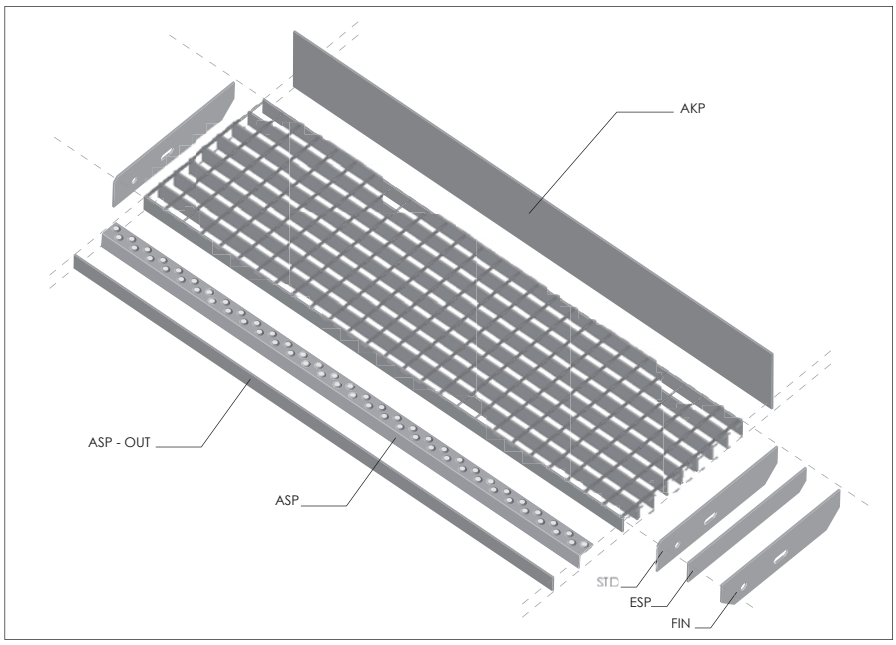

Fig.28. Nonslip panel (ASP)

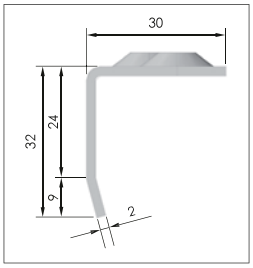

Fig.29. Panel ASP-OUT

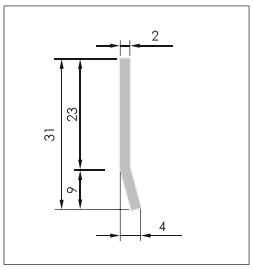

5.1.1. Standard stair tread (SOZ)

As mentioned before, SOZ stair treads can be constructed on the basis of platform gratings STD, SERR, SM, WBB, SERR-WBB, SERR-SM.
A SOZ tread has a STD side and a nonslip panel - ASP or ASP-OUT.

Fig.30. STD tread

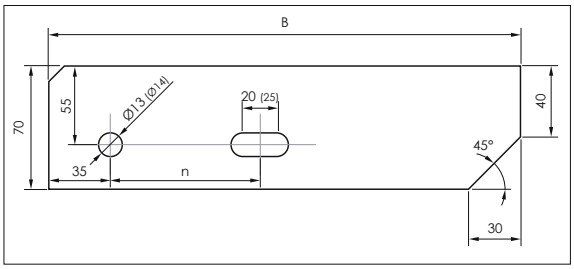

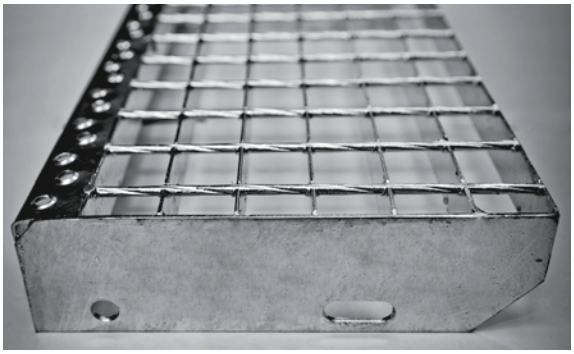

5.1.2. ESP tread

ESP tread also can be constructed on the basis of platform gratings STD, SERR, SM, WBB, SERR-WBB, SERR-SM.
A ESP tread has a ESP side and a nonslip panel - ASP or ASP-OUT.

Fig.31. ESP tread side

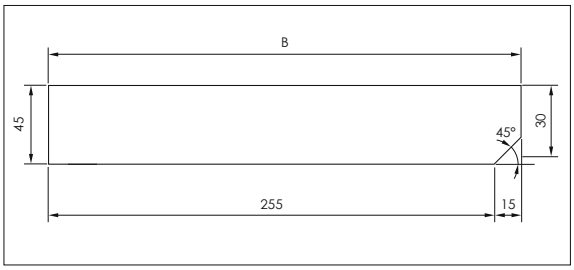

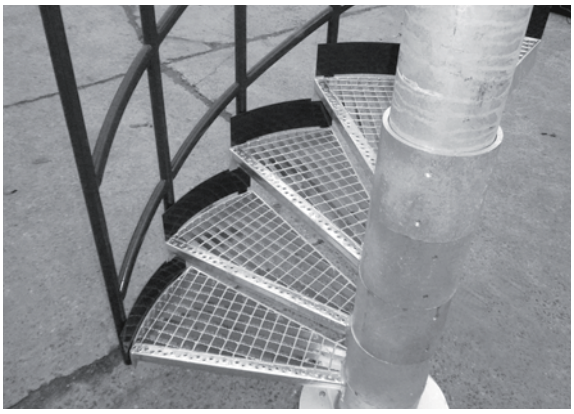

5.1.3. FIN stair treads

FIN stair tread can also be made on the basis of platform gratings STD, SERR, SM, WBB, SERR-WBB, SERR-SM.
A FIN stair tread has a FIN side and a nonslip panel - ASP or ASP-OUT.

Fig.32. FIN tread

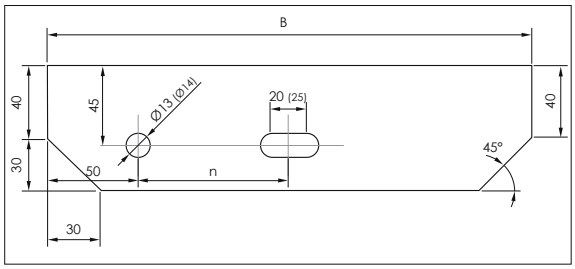

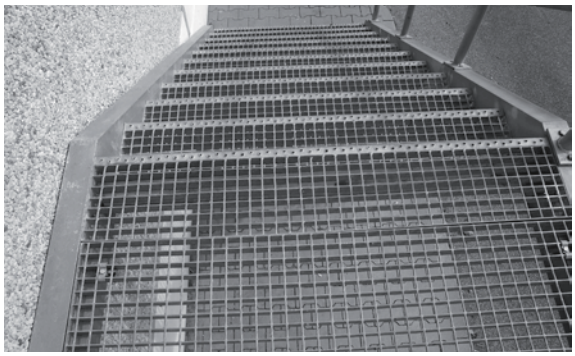

6. Landings

The assembly of a landing is similar to that of a stair treads. The key difference is the size of the platform grating used. In addition, the size of the side framing is also greater and, as a consequence, assembly openings have a different spacing, Fig. 33.
Landings types available are the same as those of SOZ.

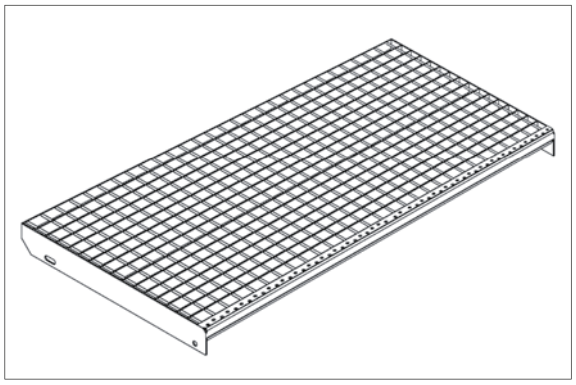

Fig.33. Diagram showing various side frames of landings

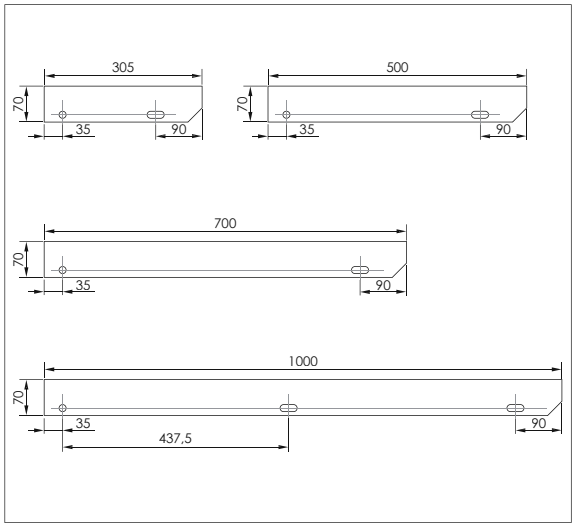

7. Handles for grating assembly

7.1. Standard handle (fixing clips)

A standard handle is a handle for basic use. - It consists of an upper part of the M-letter shape (Fig. 35 and 36), a dish (Fig. 36) at its bottom and a fastening screw - M8.

Fig.34. Diagram of a standard handle

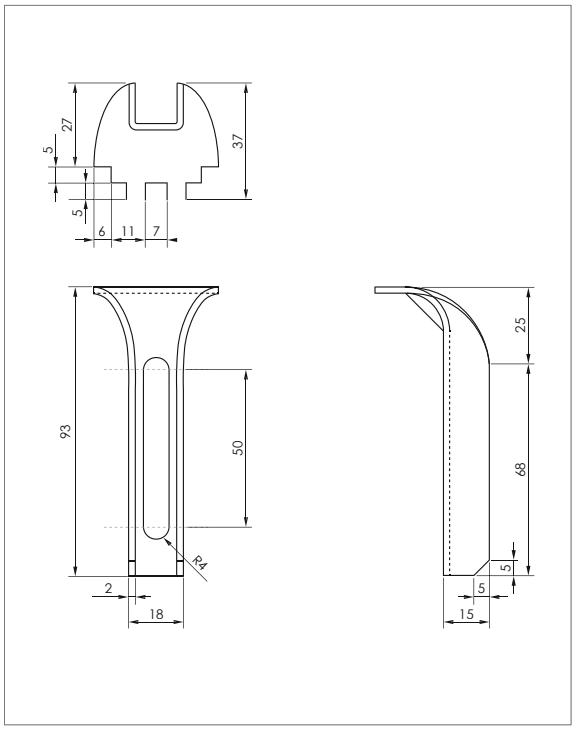

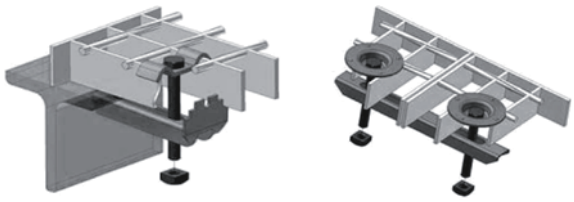

Fig.35. Diagram of an upper part of the handle shaped like the letter M

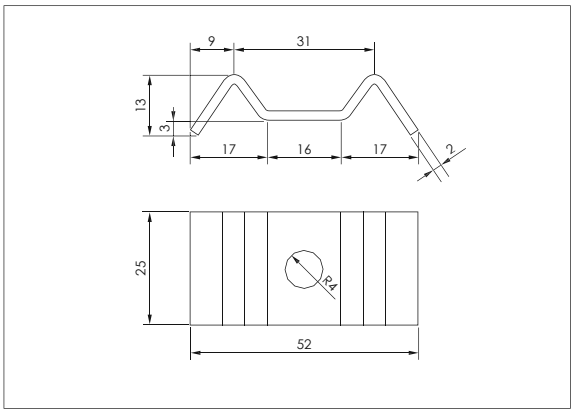

Fig.36. Diagram of an upper part of the handle s haped like the letter M – version II

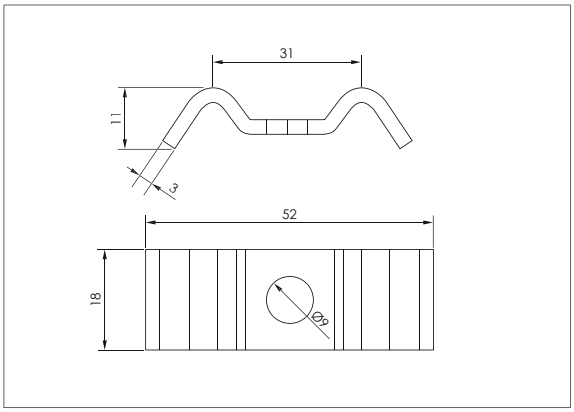

Fig.37. Diagram of the upper part of the handle ("the dish")

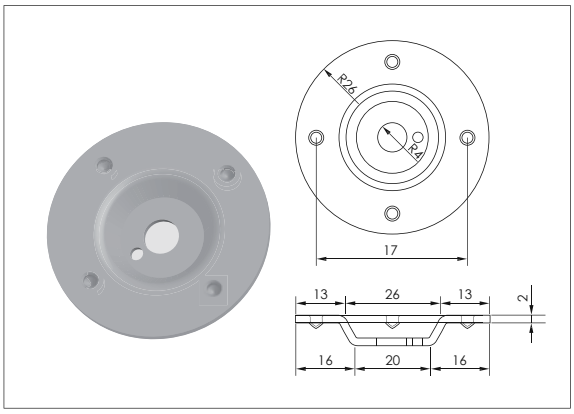

7.2. Clipping handle

Clipping handle is a handle used to join grates.- The use of clipping handles protects gratings- from excessive bending the so-called curling.

The clipping handle consists of two top elements, one bottom element and two M8 screws.

Fig.38. Diagram of a clipping handle

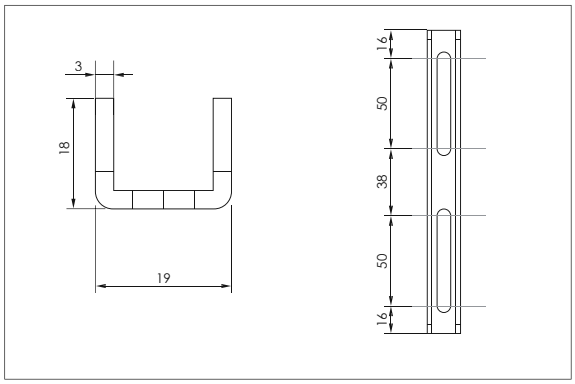

7.3. Hook handle

This is a handle that can replace the standard one, if the construction of the platform requires it. Its upper part is shaped like letter M or a dish, its lower part has a diameter of 8mm and one of its ends has a M8 screw, while the other is shaped like a hook.

Fig.39. Hook handle

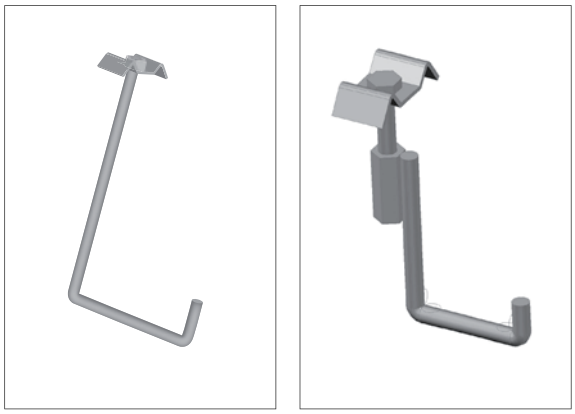

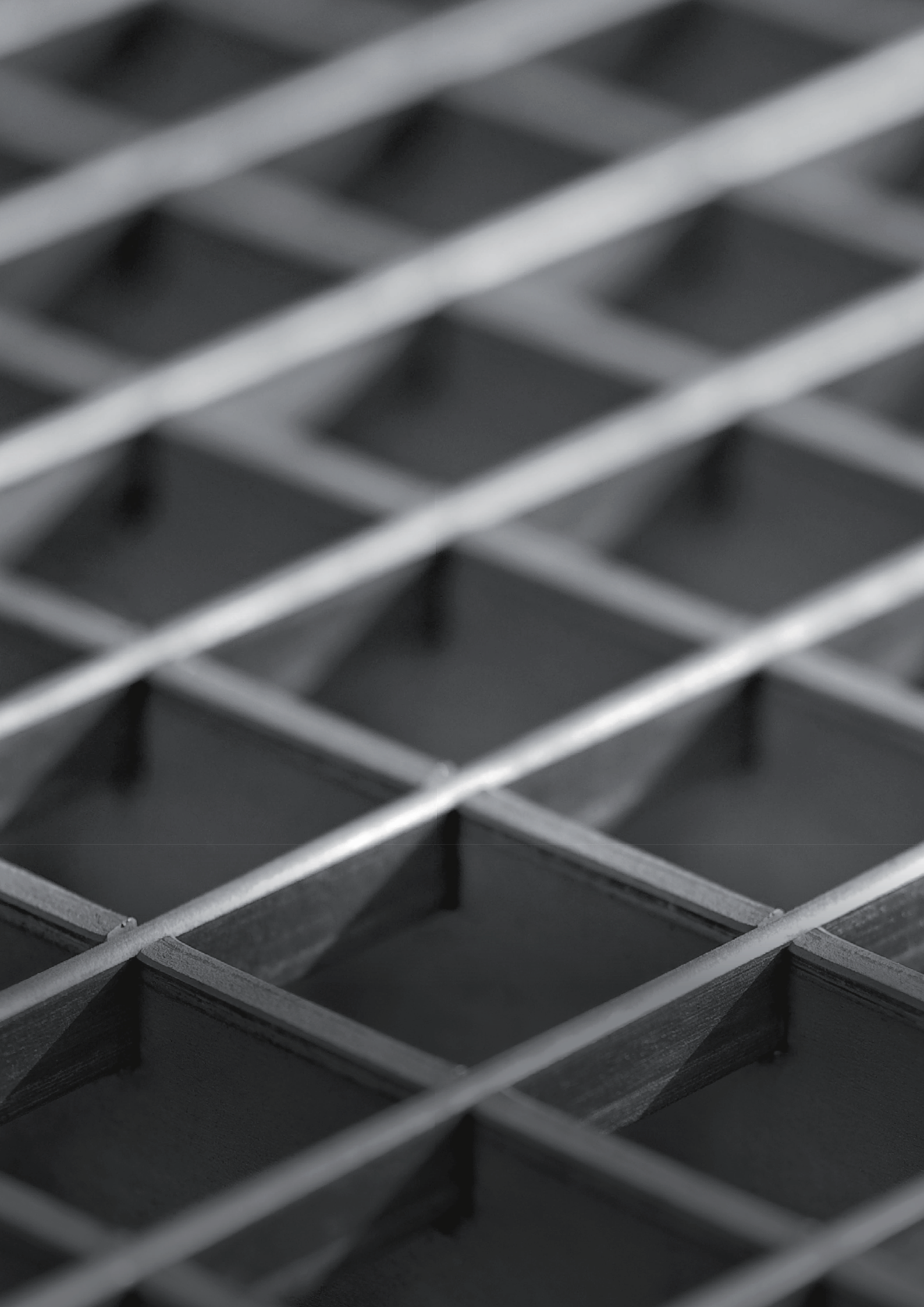

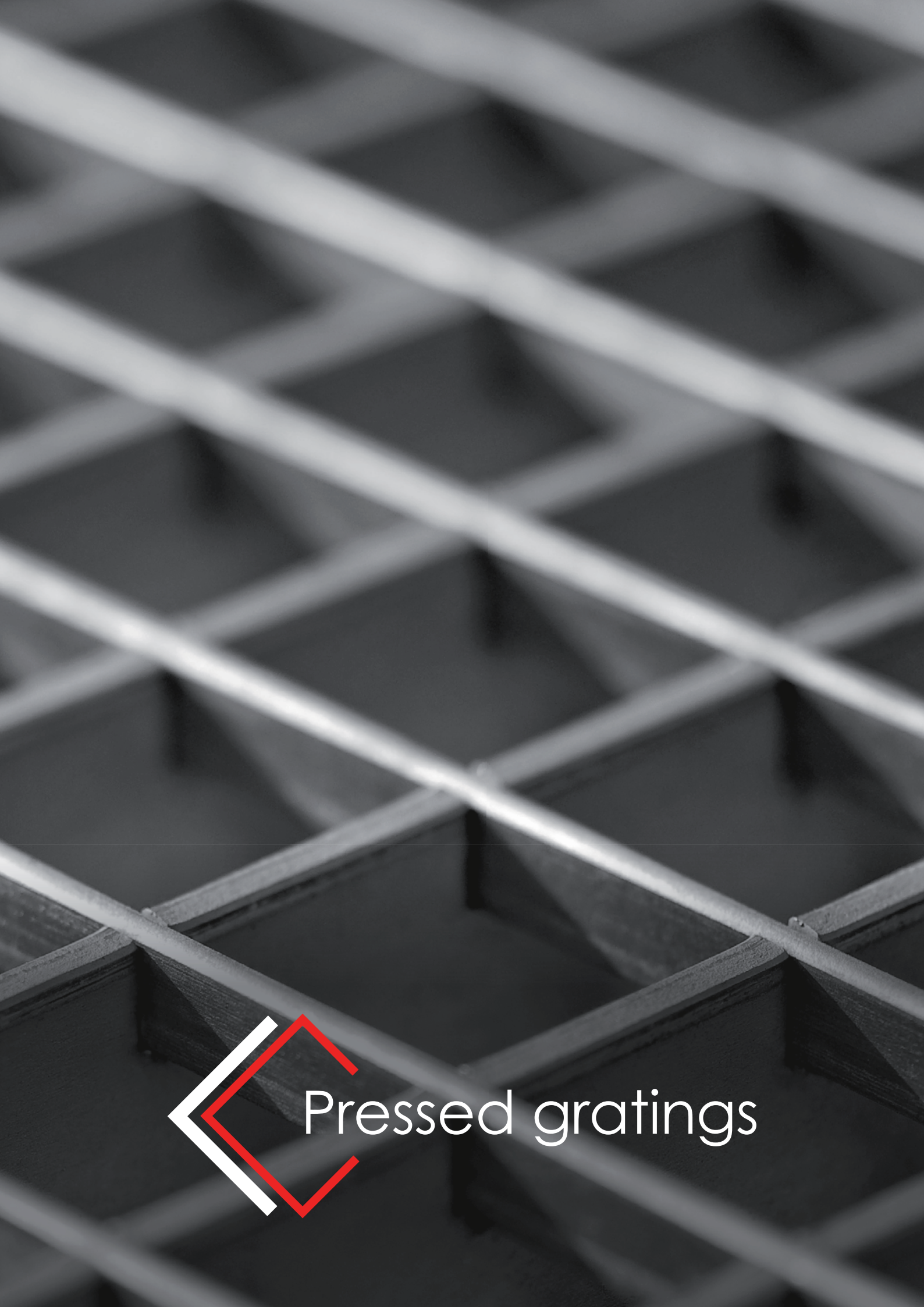

Pressed gratings

Pressed gratings

1. Manufacturing technology

In 2016, the company Termetal started production on steel gratings and pressed steps using a modern automatic production line. In this way, the company is capable of providing comprehensive services to its business partners and choosing appropriate products to meet the market needs.
The grating is manufactured in accordance with a technical approval issued by the Building Research Institute and also with standards DIN 24357, DIN 24531 and RAL GZ638.
Pressed gratings consist of bearer flat bars and transverse flat bars. They are manufactured by slotting bearer flat bars and pressing transverse flat bars into them at a pressure of up to 800 tons.

This manufacturing method of gratings ensures an equal and precise distribution of squares, which, in turn, ensures the high aesthetics of craftsmanship. Combining bearer bars with transverse bars in the pressing process makes the grating surface very stable.
Gratings of this type can be used as:

- pedestrian footbridges inside industrial and warehousing facilities,
- covering for sewers and protection of manholes,
- covering for footpaths on bridges and walkways,
- elements of internal and external façades of buildings.

In recent years, an increase has also been observed in grate application as decorative and ornamental elements.

2. Materials

Pressed and welded gratings are made of S235 steel in accordance with PN –EN 10025:2007. If a cold--rolled bar is used, a wire rod of S235 steel and similar types is used. Pressed gratings can be also made of INOX 304 and INOX 316 stainless steel.

3. Anti-corrosion protection

At the client's request, grates are protected against corrosion by hot-dip galvanizing, according to PN EN ISO 1461:2011 at the two galvanizing plants of the Termetal Group in Piła and Grudziądz. The minimal thickness of the zinc coating for elements up to 3mm thick is no less than 45µm and 55µm for elements 3 - 5mm thick.
Gratings can be also made without any anti-corrosion coating if the client reports such a need, e.g. further processing.

4. Gratings' types

4.1. Standard pressed gratings

Pressed gratings are manufactured in dimensions agreed upon by the manufacturer and recipient upon order placement. As a standard, however, the maximum dimensions of pressed gratings manufactured on the TERMETAL line are a length of 2300mm and a width of 1700mm.
Bearing bars used for the production of pressed gratings can be from 25x2 to 40x3 - and 2 - 3mm thick, while transverse flat bars is 10x2.

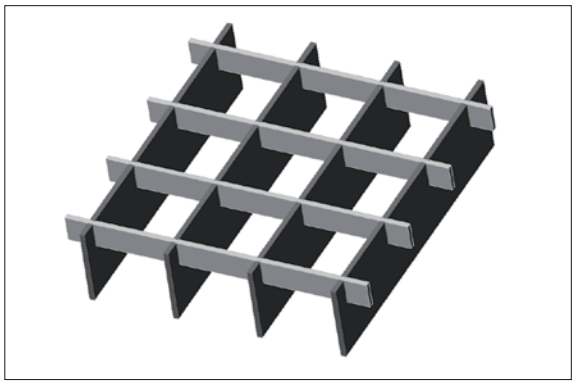

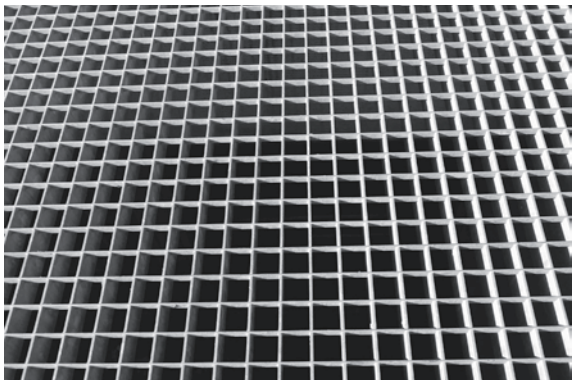

4.2. Serrated pressed gratings

In an environment with an increased risk of slipping (snow, lubricants, oils, sloping ground), serrated gratings can be used. Serration takes place by slotting the steel tape in the form of a trapezoid. In Termetal's pressed gratings, serration can be made on Bearing bars side.

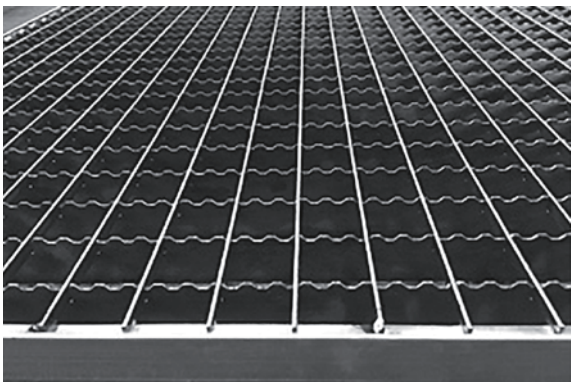

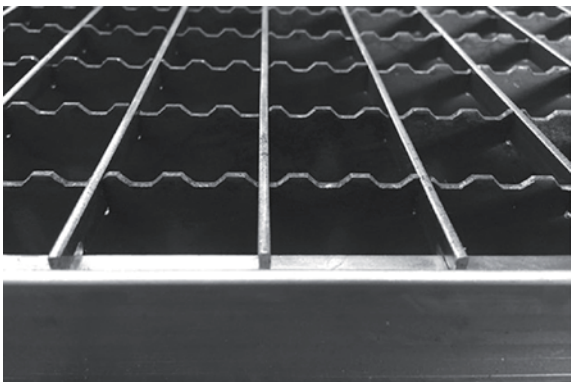

5. Pressed grating frames

Pressed gratings can be used with both pressed and welded frames.

The most frequent method of this kind of framing is pressing on the four sides of the frame made of T sections up to 2 mm thick that are welded at the corners. The welds are made at the four corners from the bottom so that they cannot be seen.

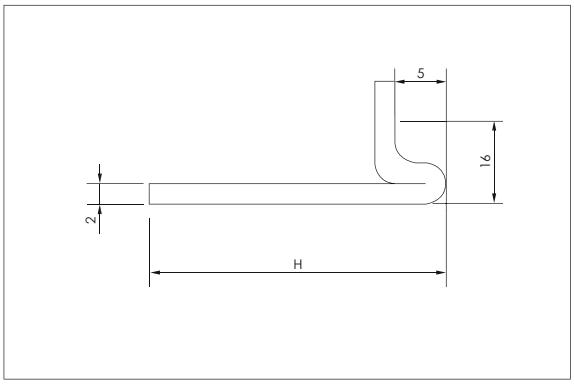

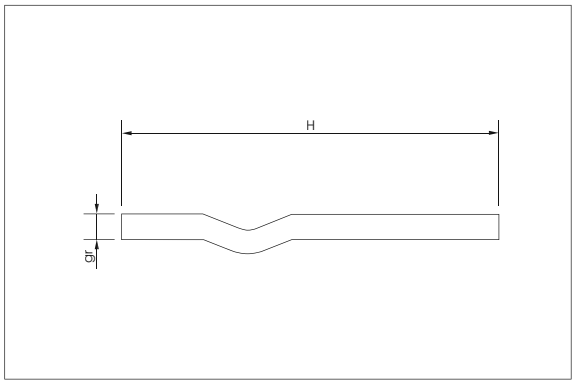

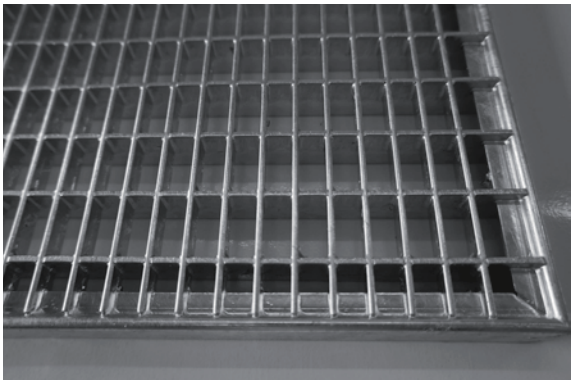

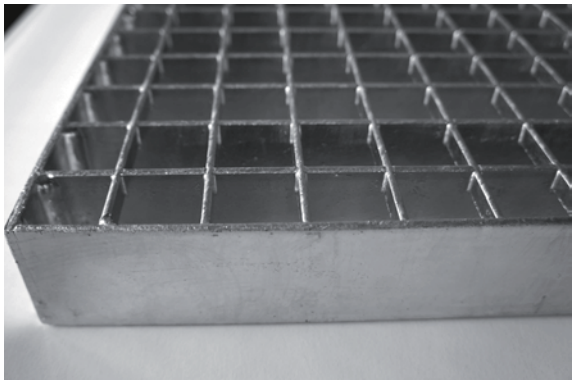

Pressed gratings

4.The division of squares used in pressed gratings is presented below:

		a									
		11,1	22,2	33,3	44,4	55,5	66,6	77,7	88,8	99,9	111,1
b	11,1	x	x	x	x	x	x	x	x	x	x
	22,2	x	x	x	x	x	x	x	x	x	x
	33,3	x	x	x	x	x	x	x	x	x	x
	44,4	x	x	x	x	x	x	x	x	x	x
	55,5	x	x	x	x	x	x	x	x	x	x
	66,6	x	x	x	x	x	x	x	x	x	x
	77,7	x	x	x	x	x	x	x	x	x	x
	88,8	x	x	x	x	x	x	x	x	x	x
	99,9	x	x	x	x	x	x	x	x	x	x
	111,1	x	x	x	x	x	x	x	x	x	x

where:
a - axial spacing of bearer bars,
b - axial spacing of transverse bars.

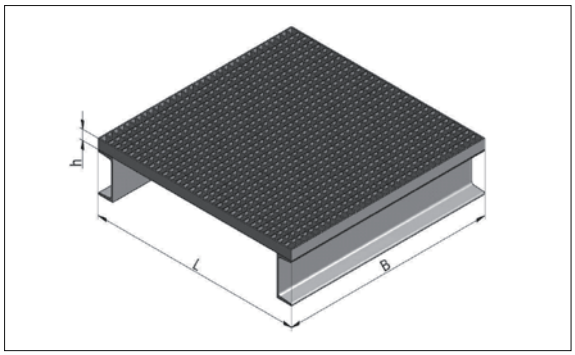

Fig. 2. Steel grating

B – width of the grating (transverse bar)
L – length of the grating (bearer bar)
h – height of bearer bars

It is also possible to manufacture TERMETAL gratings and pressed steps in a module other than the specified basic modules using a multiple of 11.1 mm.

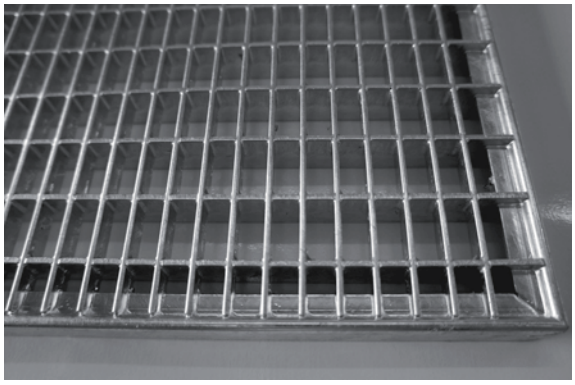

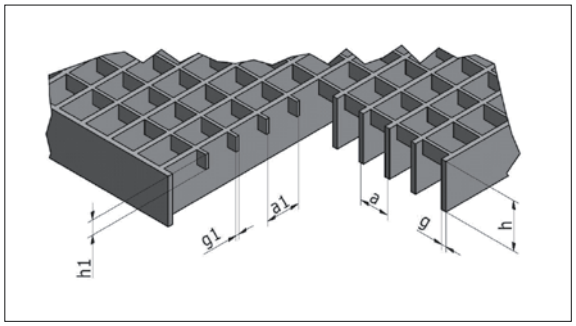

Fig. 1.Assortment of TERMETAL pressed gratings according to the square size

h – height of the bearer bar
g – thickness of the bearer bar
h – height of the transverse bar
g1 – thickness of the transverse bar

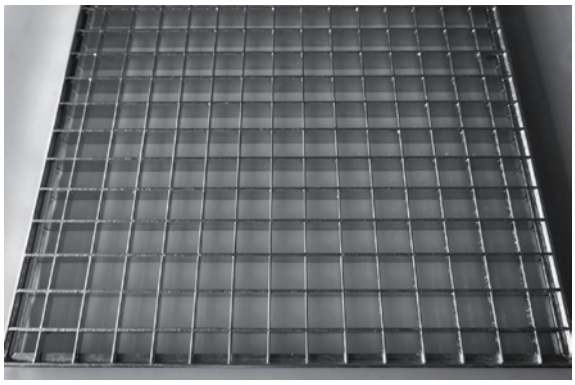

5. Table of loads for pressed gratings

Fig. Characteristic load bearing capacity of TERMETAL pressed gratings for the scale of a=33.3mm

Table 1.																							
h x g mm	para-meter	Lenght of grating (dimension L) in mm																					
		500	600	700	800	900	1000	1100	1200	1300	1400	1500	1600	1700	1800	1900	2000	2100	2200	2300	2400	2500
20×2	Fv	1990	1382	1015	777	614	498	411	346	294	254	221	194	172	154	138	124	113	103	94	86	80
	fv	0,2	0,29	0,39	0,51	0,64	0,79	0,96	1,14	1,34	1,56	1,79	2,03	2,29	2,57	2,87	3,17	3,5	3,84	4,2	4,57	4,96
	Fp	172	138	115	98	86	76	69	63	57	53	49	46	43	40	38	36	34	33	31	30	29
	fp	0,2	0,27	0,36	0,46	0,58	0,71	0,85	1	1,16	1,34	1,53	1,73	1,95	2,18	2,42	2,67	2,94	3,22	3,51	3,82	4,13
20×3	Fv	2985	2073	1523	1166	921	746	617	518	442	381	332	292	258	230	207	187	169	154	141	130	119
	fv	0,2	0,29	0,39	0,51	0,64	0,79	0,96	1,14	1,34	1,56	1,79	2,03	2,29	2,57	2,87	3,17	3,5	3,84	4,2	4,57	4,96
	Fp	258	206	172	148	129	115	103	94	86	80	74	69	64	61	58	54	52	49	47	45	43
	fp	0,2	0,27	0,36	0,46	0,58	0,71	0,85	1	1,16	1,34	1,53	1,73	1,95	2,18	2,42	2,67	2,94	3,22	3,51	3,82	4,13
25×2	Fv	3110	2160	1587	1215	960	777	643	540	460	397	346	304	269	240	215	194	176	161	147	135	124
	fv	0,16	0,23	0,31	0,41	0,51	0,63	0,77	0,91	1,07	1,24	1,43	1,63	1,83	2,06	2,29	2,54	2,8	3,07	3,36	3,66	3,97
	Fp	267	214	178	153	134	119	107	97	89	82	76	71	67	63	59	56	53	51	49	46	45
	fp	0,15	0,21	0,28	0,36	0,45	0,55	0,67	0,79	0,92	1,06	1,21	1,38	1,55	1,73	1,93	2,13	2,34	2,57	2,8	3,04	3,3
25×3	Fv	4665	3239	2380	1822	1440	1166	964	810	690	595	518	456	404	360	323	292	264	241	220	202	187
	fv	0,16	0,23	0,31	0,41	0,51	0,63	0,77	0,91	1,07	1,24	1,43	1,63	1,83	2,06	2,29	2,54	2,8	3,07	3,36	3,66	3,97
	Fp	401	321	267	229	201	178	160	146	134	123	115	107	100	94	89	84	80	76	73	70	67
	fp	0,15	0,21	0,28	0,36	0,45	0,55	0,67	0,79	0,92	1,06	1,21	1,38	1,55	1,73	1,93	2,13	2,34	2,57	2,8	3,04	3,3
25×4	Fv	6220	4319	3173	2430	1920	1555	1285	1080	920	793	691	607	538	480	431	389	353	321	294	270	249
	fv	0,16	0,23	0,31	0,41	0,51	0,63	0,77	0,91	1,07	1,24	1,43	1,63	1,83	2,06	2,29	2,54	2,8	3,07	3,36	3,66	3,97
	Fp	535	428	356	306	267	238	214	194	178	165	153	143	134	126	119	113	107	102	97	93	89
	fp	0,15	0,21	0,28	0,36	0,45	0,55	0,67	0,79	0,92	1,06	1,21	1,38	1,55	1,73	1,93	2,13	2,34	2,57	2,8	3,04	3,3
25×5	Fv	7775	5399	3967	3037	2400	1944	1606	1350	1150	992	864	759	673	600	538	486	441	402	367	337	311
	fv	0,16	0,23	0,31	0,41	0,51	0,63	0,77	0,91	1,07	1,24	1,43	1,63	1,83	2,06	2,29	2,54	2,8	3,07	3,36	3,66	3,97
	Fp	668	535	446	382	334	297	267	243	223	206	191	178	167	157	149	141	134	127	122	116	111
	fp	0,15	0,21	0,28	0,36	0,45	0,55	0,67	0,79	0,92	1,06	1,21	1,38	1,55	1,73	1,93	2,13	2,34	2,57	2,8	3,04	3,3
30×2	Fv	4478	3110	2285	1749	1382	1120	925	777	662	571	498	437	387	346	310	280	254	231	212	194	179
	fv	0,13	0,19	0,26	0,34	0,43	0,53	0,64	0,76	0,89	1,04	1,19	1,35	1,53	1,71	1,91	2,12	2,33	2,56	2,8	3,05	3,31
	Fp	382	306	255	218	191	170	153	139	127	118	109	102	96	90	85	80	76	73	69	66	64
	fp	0,12	0,17	0,23	0,3	0,38	0,46	0,55	0,66	0,77	0,88	1,01	1,15	1,29	1,44	1,6	1,77	1,95	2,14	2,33	2,54	2,75
30×3	Fv	6717	4665	3427	2624	2073	1679	1388	1166	994	857	746	656	581	518	465	420	381	347	317	292	269
	fv	0,13	0,19	0,26	0,34	0,43	0,53	0,64	0,76	0,89	1,04	1,19	1,35	1,53	1,71	1,91	2,12	2,33	2,56	2,8	3,05	3,31
	Fp	573	459	382	328	287	255	229	208	191	176	164	153	143	135	127	121	115	109	104	100	96
	fp	0,12	0,17	0,23	0,3	0,38	0,46	0,55	0,66	0,77	0,88	1,01	1,15	1,29	1,44	1,6	1,77	1,95	2,14	2,33	2,54	2,75
30×4	Fv	8956	6220	4570	3499	2764	2239	1850	1555	1325	1142	995	875	775	691	620	560	508	463	423	389	358
	fv	0,13	0,19	0,26	0,34	0,43	0,53	0,64	0,76	0,89	1,04	1,19	1,35	1,53	1,71	1,91	2,12	2,33	2,56	2,8	3,05	3,31
	Fp	764	611	509	437	382	340	306	278	255	235	218	204	191	180	170	161	153	146	139	133	127
	fp	0,12	0,17	0,23	0,3	0,38	0,46	0,55	0,66	0,77	0,88	1,01	1,15	1,29	1,44	1,6	1,77	1,95	2,14	2,33	2,54	2,75
30×5	Fv	11195	7775	5712	4373	3455	2799	2313	1944	1656	1428	1244	1093	968	864	775	700	635	578	529	486	448
	fv	0,13	0,19	0,26	0,34	0,43	0,53	0,64	0,76	0,89	1,04	1,19	1,35	1,53	1,71	1,91	2,12	2,33	2,56	2,8	3,05	3,31
	Fp	955	764	637	546	478	425	382	347	318	294	273	255	239	225	212	201	191	182	174	166	159
	fp	0,12	0,17	0,23	0,3	0,38	0,46	0,55	0,66	0,77	0,88	1,01	1,15	1,29	1,44	1,6	1,77	1,95	2,14	2,33	2,54	2,75
40×2	Fv	7961	5529	4062	3110	2457	1990	1645	1382	1178	1015	885	777	689	614	551	498	451	411	376	346	318
	fv	0,1	0,14	0,19	0,25	0,32	0,4	0,48	0,57	0,67	0,78	0,89	1,02	1,15	1,29	1,43	1,59	1,75	1,92	2,1	2,29	2,48
	Fp	668	535	445	382	334	297	267	243	223	206	191	178	167	157	148	141	134	127	121	116	111
	fp	0,09	0,13	0,17	0,23	0,28	0,35	0,42	0,49	0,57	0,66	0,76	0,86	0,97	1,08	1,2	1,33	1,46	1,6	1,75	1,9	2,06
40×3	Fv	11942	8293	6093	4665	3686	2985	2467	2073	1767	1523	1327	1166	1033	921	827	746	677	617	564	518	478
	fv	0,1	0,14	0,19	0,25	0,32	0,4	0,48	0,57	0,67	0,78	0,89	1,02	1,15	1,29	1,43	1,59	1,75	1,92	2,1	2,29	2,48
	Fp	1002	802	668	573	501	445	401	364	334	308	286	267	251	236	223	211	200	191	182	174	167
		0,09	0,13	0,17	0,23	0,28	0,35	0,42	0,49	0,57	0,66	0,76	0,86	0,97	1,08	1,2	1,33	1,46	1,6	1,75	1,9	2,06

Fv – value of continuous load, daN/m2,[2]
Fp – value of concentrated load on the surface of 200x200 mm, daN,
fv – deflection under load Fv, cm,
fp – deflection under load Fp, cm

Pressed gratings

Coefficients for calculating load values for gratings with the scale of a						
Scale a	11,1	22,2	33,3	44,4	55,5	66,6
Coefficient for calculation of forces Fv and Fp	**2,93**	**1,48**	**1**	**0,74**	**0,61**	**0,52**

Fv – value of continuous load, daN/m2
Fp – value of concentrated load on a surface of 200×200 mm, daN

Values of grating resistance with a scale other than 33.3 mm must be calculated according to the pattern:

value of grating resistance with a scale a=33.3 according to the table	X	coefficient for the selected scale	=	value of resistance for the grating with the selected scale

Fig. The pattern for calculating the load-bearing capacity for TERMETAL pressed gratings with a scale other than a = 33.3 mm
Fv – value of continuous load, daN/m2,
Fp – value of concentrated load on the surface of 200x200 mm, daN,
fv – deflection under load Fv, cm,
fp – deflection under load Fp, cm

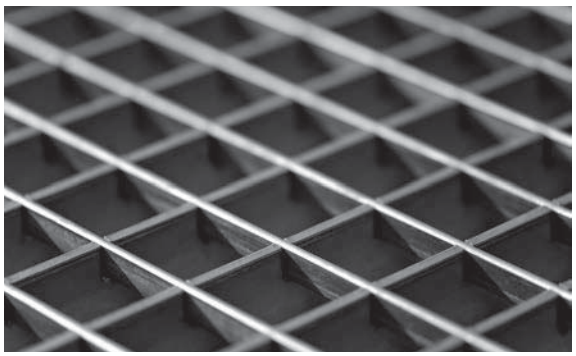

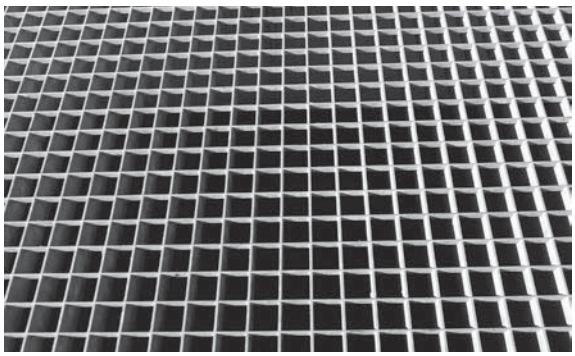

6. Pressed grating steps

Steps made of pressed gratings may be manufactured within the available assortment of squares and bearer bars as agreed upon with the manufacturer.
Just like welded grating steps, they are equipped with side framing.
The so-called side of the step allows for quick and easy attachment to the load-bearing structure. It is also equipped with an antislip front plate, which has its properties thanks to special perforation on the upper surface.

Side of the standard step

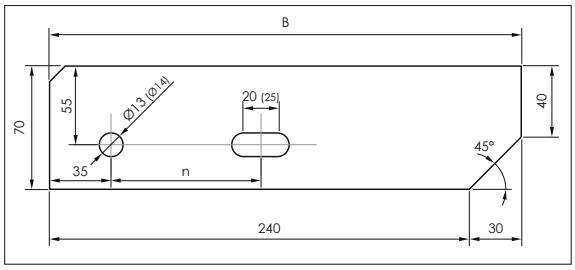

Typical dimensions of steps, mm																									
L	600			800							900					1000					1200				
B	205	240	270	295	305	205	240	270	295	305	205	240	270	295	305	205	240	270	295	305	205	240	270	295	305
h	Type of bearer bar																								
n	120	120	150	180	180	120	120	150	180	180	120	120	150	180	180	120	120	150	180	180	120	120	150	180	180

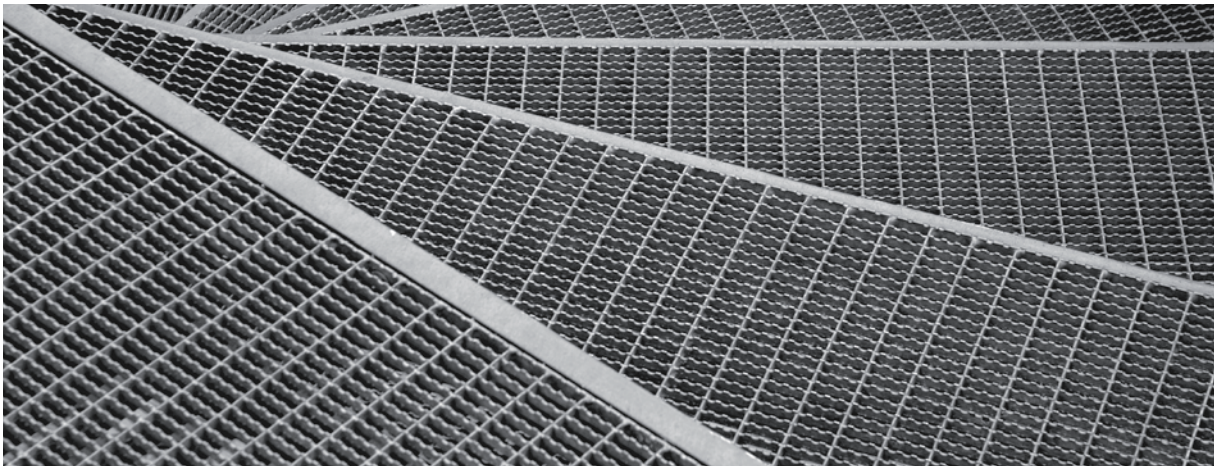

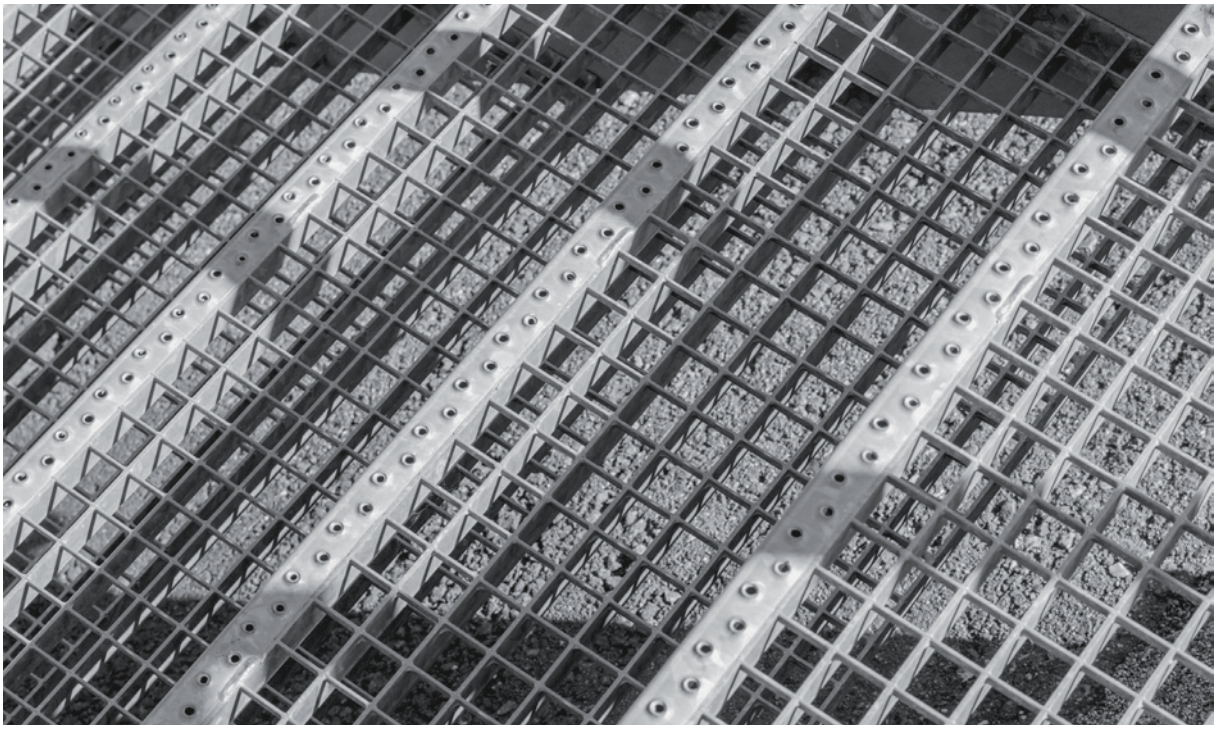

Flat bars

Flat bars

Since July 2012, we have had the most modern line for production of narrow cold-rolled coils in Poland, created according to the PN EN 10140 standard and known as cold-rolled flat bars. They have perfect quality parameters thanks to constant monitoring of real dimensions and automatic corrections, which occur during the rolling process. Thanks to the technology adopted, we can fulfil production orders that are strictly adjusted to our customer's needs.

1. Production programme

We offer a steel cold rolled coil – a cold rolled flat bar which complies with the requirements concerning the dimensional tolerance and shape (the PN - EN 10140 standard).
We make flat bars from a type of steel chosen on the basis of our customer's needs.

The offer covers the following products:

A cold rolled flat bar can have one of the following sizes:

10x2, 15x2, 20x2, 25x2, 30x2 mm
10x3, 15x3, 20x3, 25x3, 30x3 mm
10x4, 15x4, 20x4, 25x4, 30x4 mm
10x5, 15x5, 20x5, 25x5, 30x5 mm

and any intermediate size between those indicated.

Minimal size of the flat bar we offer is 9x1,8 mm.

2.Types of flat bars edges

The edges of a flat bar can be rounded,- straight or chamfered.

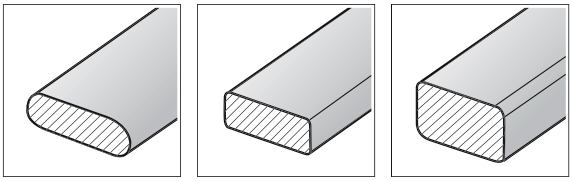

3. Tolerance

The products are made with the following dimen-- sional thickness tolerance compliant with the PN EN 10140 standard:

b ± 0,20 mm
t ± 0,045 mm

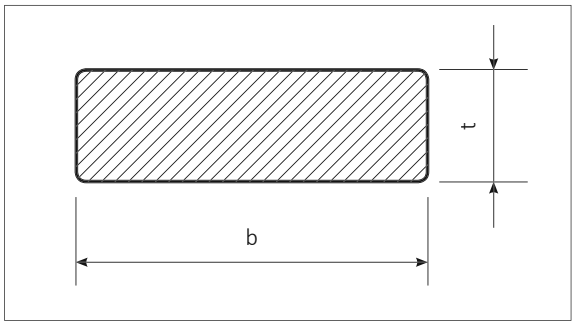

We can also make flat bars with another, previously agreed upon tolerance.

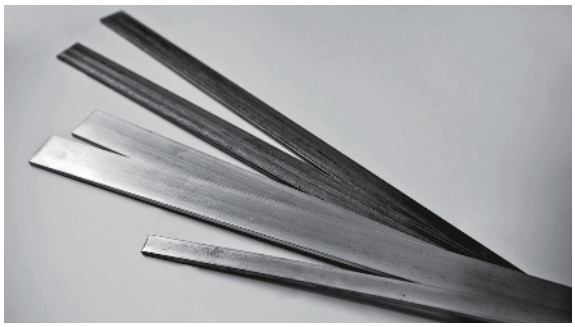

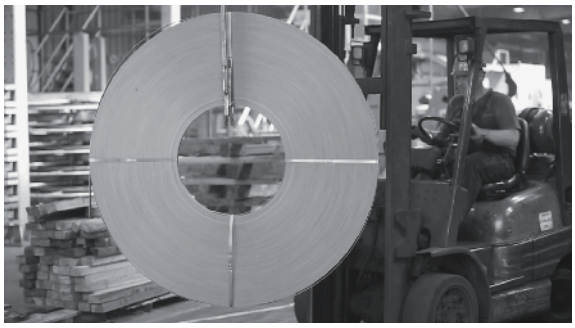

4. Packaging

We prepare and pack flat bars in the following-way:

- In circles of an internal diameter of 600mm and-an external diameter of 1800mm max., the mass of a single coil does not exceed 0.4 Mg (t)
- In coils (the mass of a single coil requires individual consultation)
- In any segments of L length without exceeding 6000 mm

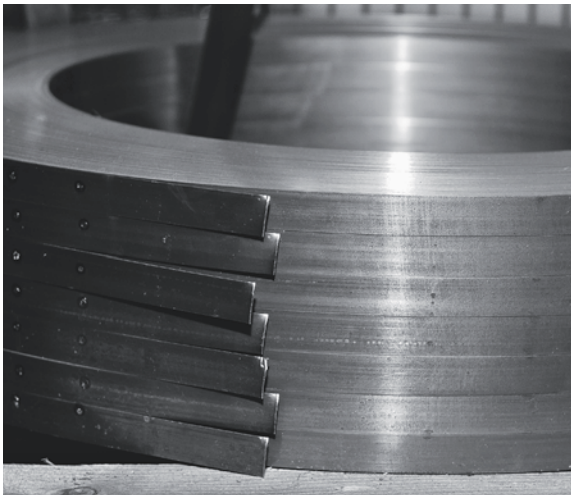

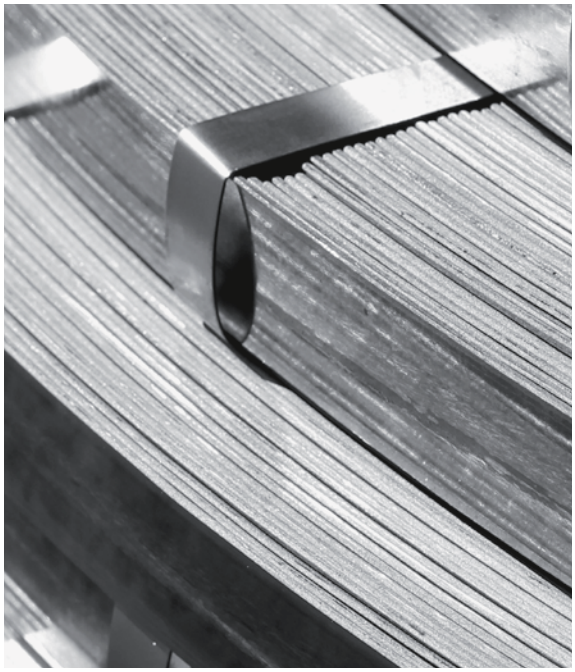

5. Cold-rolled flat bars mass

Width b (mm)		Thickness t (mm)			
		2	**3**	**4**	**5**
		Theoretical mass 1 m (kg)			
Flat bar	**10**	0,16	0,24	0,31	0,39
	15	0,24	0,35	0,47	0,59
	20	0,31	0,47	0,63	0,79
	25	0,39	0,59	0,79	0,98
	30	0,47	0,71	0,94	1,18
Density adopted for calculations: 7.85 kg/dm^3					

6. Trading conditions

Terms of order fulfilment:
- Products in the storehouse – up to 48 hours
- Products to be produced – 3 to 21 days

Special orders require individual consultations.

Galvanisation

Galvanisation

1. Protection against corrosion

Since steel products have been in use, the phenomenon of corrosion, or iron oxidation, has been a known nuisance. Steel products, which are not appropriately protected against external factors, are characterised by a shorter lifetime due to safety or aesthetic reasons. Various types of methods for avoiding these adverse effects are used in practice. All of them have a short--term efficiency and they do not fulfil all the expectations in all conditions as it is hard to choose an anticorrosion agent which is resistant to the majority of external factors (such as abrasion and temperature differences, among other factors) and, at the same time, makes the product look aesthetically pleasing.

Among all known methods of anticorrosion protection of steel products, the best one is hot-dip galvanising. After comparing all benefits and costs related to hot-dip galvanisation, we can say that is currently the cheapest and most efficient method of avoiding corrosion. Paint coatings – which are often very aesthetically pleasing - are usually very expensive and they do not have an appropriate resistance to mechanical damages. In addition, in case of improper preparation of the surface, there will be rust formations and the coating will start to crack and peel. Oiling surfaces with oils or grease due to practical reasons and short duration period also can be used to a very limited extent.

... thus, hot-dip galvanisation

Here is some basic data concerning protective zinc coatings:

- Its durability within average environmental conditions in Poland is around 3±100 years, and natural losses happening due to atmospheric factors occur in the region of about 0,1-2,5 µm per year in rural conditions or up to 10µm per year in an aggressive atmosphere.

- Galvanisation of the product surface is a result of chemical and metallurgical reactions occurring thanks to galvanisation technology. As a result, there is a diffusion of zinc particles in the external layer of steel, which create strong intermolecular bonds – FeZn. After galvanisation, on the external layer of the product, a layer of pure zinc will appear, which will be subject to natural hardening after some time, making it very resistant to mechanical damages and relatively resistant to various chemical factors.

- Appropriate surface preparation for hot-dip galvanisation can be achieved thanks to complex chemical process and the fact that the surface is covered in zinc the best proof of the high quality of this preparation as
  There would be places that would not be covered in zinc if the surface has not been appropriately prepared.

- Aesthetics of a hot-dip galvanised product are very high, even though the process is based mainly on corrosion protection obtained thanks to a zinc bath, thanks to the technology applied and technical equipment used in galvanisation plants of TERMETAL together with the experience of the staff, we are able to make very aesthetic products,

- Currently, there are methods of making galvanised products aesthetically pleasing by covering them with paint coatings. TERMEAL galvanisation plants are adopted for galvanisation of products and their further processing by applying layers of paint coating.

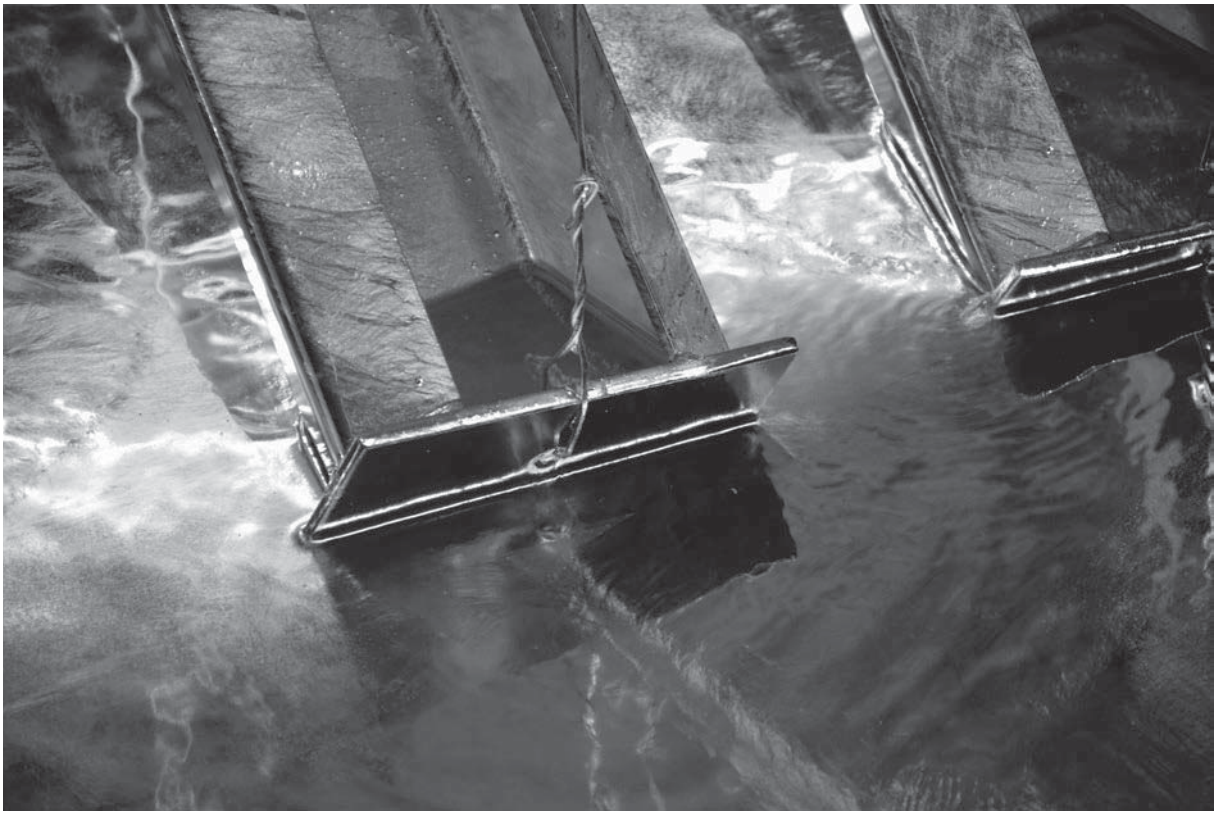

2. Zinc alloys used in galvanisation plants of the TERMETAL Group

HOT-DIP GALVANISATION	Anti-corrosive protection of steel surfaces via dipping them in zinc in temperatures of 450°C

We use materials and raw materials of the highest quality, while the technological process is based on the latest-achievements of the technological knowledge. TERMETAL galvanisation plants cooperate with various galvanisation plants in the country as well as with the NYRSTAR GROUP from Belgium and France and BOLIDEN from Scandinavia. SHG zinc is used as a basic component of the zinc bath (of a special quality), with a pureness level not lower than 99.995% Zn. The additional components are an alloy called TECHNIGALVA + Bi, with additions of-nickel and bismuth, and Galva 5 alloys with aluminium.

Special care of the quality of the zinc bath results in the fact that the special layer applied in our galvanisation plant is characterised by:

-

- Construction compliant with the EN ISO 1461 standard,
- Gloss stays up to 3 months from the day of galvanisation,
- High levels of aesthetics,
- Uniformity and homogenous distribution of zinc on the whole surface,
- Higher adhesiveness to a product thanks to a careful choice of the bath components,
- Higher resistance to abrasion and other mechanical defects,
- Higher flexibility.

3. General technical condition of accepting and collecting steel products designed for galvanisation

The conditions for obtaining a zinc coating of a satisfying quality are, among others:

- Use of a material whose chemical composition allows for the correct conduction of the digestion and galvanisation processes,
- Appropriate construction of the product,
- Provision of a material free from contamination which would make the digestion or galvanisation processes difficult or impossible,
- Choosing appropriate technology and methods of hot-dip galvanisation.

An important element guaranteeing the final success of galvanisation is cooperation of the supplier of a steel construction or another metal product that is to be galvanised with experts from our galvanisation plant who will professionally reply to all concerns

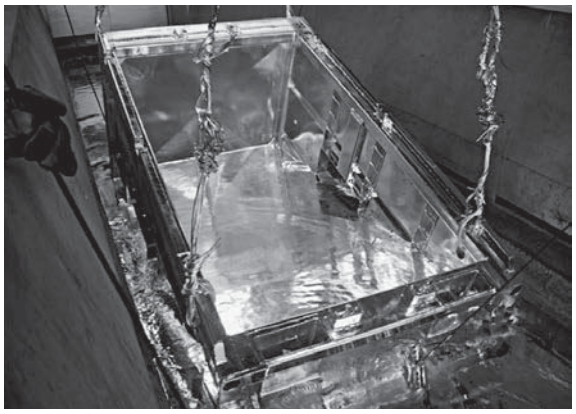

4. Basic data for our contractors

4.1. Material type

Products made of construction steel type St3S, St3SX, St4S, St4SX, 18G2, 18G2A or their equivalents such as: S2353RG2, S2753R, S3553R, may be galvanized. The basic condition for obtaining a clear, smooth and uniform zinc layer is choosing steel according to its chemical composition in accordance with the following requirements.
The content of silicone in steel designed for hot dip galvanisation must be lower than 0,03 % or fall within the range between 0.12 and 0.25%. Due to the characteristics of phosphor and silicone in steel, the value of their equivalent should be checked using the following formula:

$$Esi = Si+2,5 \cdot P$$

- Si and P is the percentage amount of silicone and phosphor (in steel).

The value of the Esi equivalent must exceed he requirements of silicone content in steel. In order to fully present the influence of the chemical composition of steel on the effects of galvanisation it should be added that the total amount of silicon and carbon should not exceed 0.5%.

In case of zinc coating of products made of steel of another chemical composition, the zinc coating obtained will be grey, matt, rough and non-uniform, and in extreme cases, it may be impossible to apply it. Similar effects may also occur when the steel has a diversified chemical composition, especially of its external layer.

4.2. The Sandelin effect

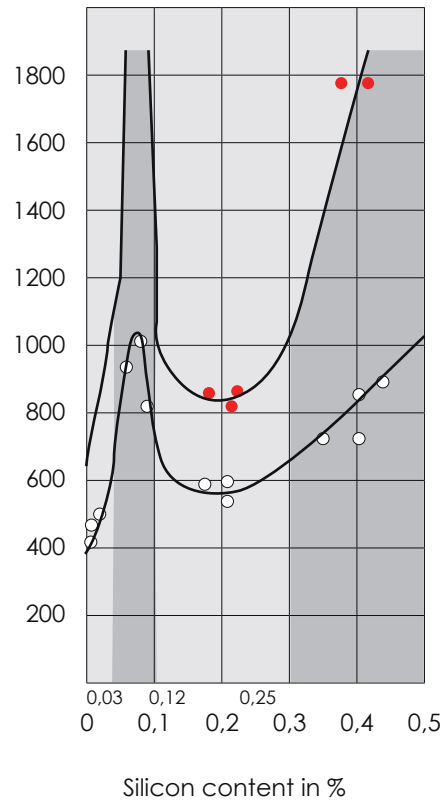

4.3. State of the surface

Preparation of the surface by the supplier is of a key importance for obtaining a high-quality zinc coating.- The surface of products to be galvanized should be free of oils, grease, old coating and so forth, as well- as from thick rust and scale. In addition, supporting agents used in welding may have a negative influence on the quality of the zinc layer, such as "SILSPAW", etc. All metallurgical defects, also invisible to the- naked eye, such as: scaliness, overlaps, roughness, pits, etc. become visible after galvanizing and can cause local cracking of the zinc coating. -

4.4. Construction requirements

- The shape of the product must allow for the excess of the liquid (melted) zinc to run off from it while it is taken out of the zinc bath,
- All elements of the construction, which are permanently joined, should be made of one type of steel and of a similar thickness,
- While designing, it is necessary to take into consideration consequences of releasing stresses as a result of high temperature of about 450°C,
- Products may not have the features of a closed surface, and in closed profiles or containers there should be draining and air venting openings as any negligence within this scope may lead to a mechanical damage of the product,
- Objects should have handles or openings which allow for their hanging as a means of technological transportation,
- During galvanisation of elements with opening for assembly of screws or axes, allowances between 1 to 2 mm should be adopted,
- The product should not have any sharp or non-chamfered edges,
- Detailed information concerning the construction requirements of products designed for galvanisation are described in Technical Conditions available from representatives of the galvanisation plant and from our website.

Closed steel section parameters in mm			The diameter opening in mm appropriately for the number of openings		
○	□	▭	1	2	4
Lower than:					
15	15	20x10	8		
20	20	30x15	10		
30	30	40x20	12	10	
40	40	50x30	14	12	
50	50	60x40	16	12	10
60	60	80x40	20	12	10
80	80	100x10	20	16	12
100	100	120x80	25	20	12
120	120	160x80	30	25	20
160	160	200x120	40	25	20
200	200	260x140	50	30	25

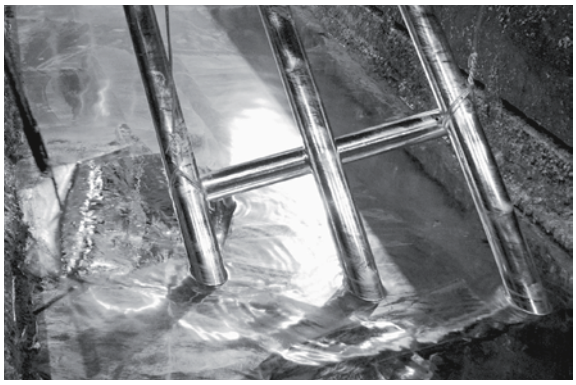

4.5. Additional guidelines

- Prior to galvanisation, it is necessary to consult dates and technical conditions of products which are to be galvanised with experts at the galvanisation plant,
- If after galvanisation products will be subject to further processing, for example, by covering them with paint coats, this should be consulted with the galvanisation plant.
- The galvanisation plant should be notified about products of special use, such as drinking water supply pipeline and conditions of their galvanisation should be consulted prior to galvanisation,
- For products of a complex structure it is recommended to conduct galvanisation first on a sample in order to avoid any potential deformations.
- The data in this document is only for reference purposes. Any detailed information can be found in the General conditions of the galvanisation service.
- Rules of cooperation are specified in the Cooperation Agreement. This document and the one mentioned in the previous bullet are available on our website and in our sales department.

Thickness of a layer and zinc mass in relations to the surface according to EN ISO 1461

Intermediate products group	Average values according to DIN 1461		Average coating thickness in µm
	Local thickness of a layer in µm	Related to the surface mA[31] in g/m²	
Steel parts of a thickness up to 1.5mm	35	360	45
Steel parts of a thickness between 1.5mm and 3.0mm	45	400	55
Steel parts of a thickness between 3.0mm to 6.0mm	55	500	70
Steel parts of a thickness over 6.0mm	70	610	85
Iron casting > or equal to 6.0 mm	70	400	80
Iron casting < 6,0 mm	60	500	70

Any doubts concerning our activity will be clarified by our experts who can be contacted via the phone numbers indicated on the last page of the folder. We can also provide advice on site in the galvanisation plant.

5. Technological possibilities in the galvanisation plants of TERMAL Group

Piła

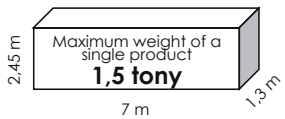

A single input hanged on a traverse should not exceed the weight of 1.5 tonnes.

Grudziądz

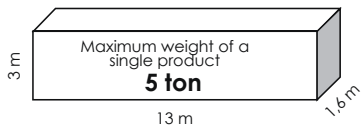

A single input hanged on a traverse should not exceed the weight of 1.5 tonnes.

Both galvanisation plants have the DASt 022 Certificates.
Products are hanged on traverses. Thanks to this, the elements do not touch each other during galvanisation.
It is possible to galvanise products whose parameters and weights are different to those given above; however, this will require additional consultation with experts from the galvanisation plants.

Detailed information is available on our website: www.termetal.pl

OUR PRODUCTION PLANTS

TERMETAL PIOTR GLANER Sp. K.
PL 64-920 PIŁA
ul. Ceramiczna 21
tel. +48 67 214 24 77
fax +48 67 214 24 75
e-mail: sekretariat-pil@termetal.pl

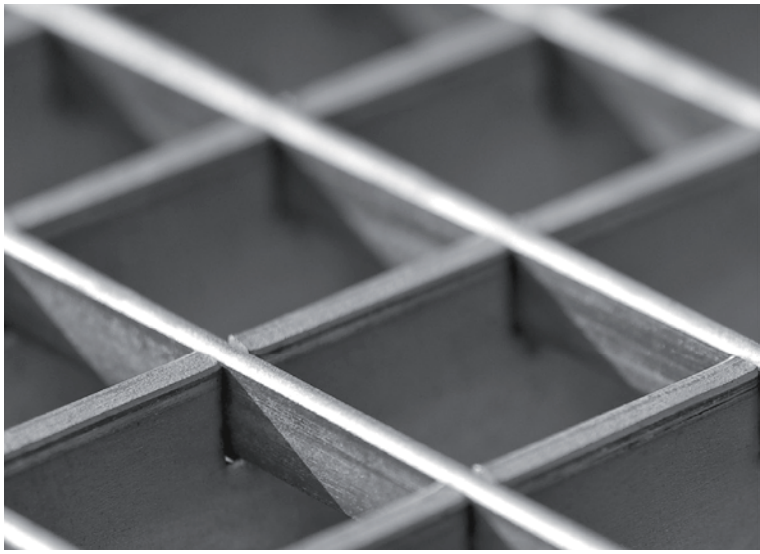

TERMETAL PIOTR GLANER Sp. K.
PL 86-300 Grudziądz
ul. Magazynowa 18
tel. +48 (56) 461 76 10
fax +48 (56) 465 20 15
e-mail: grudziadz@termetal.pl

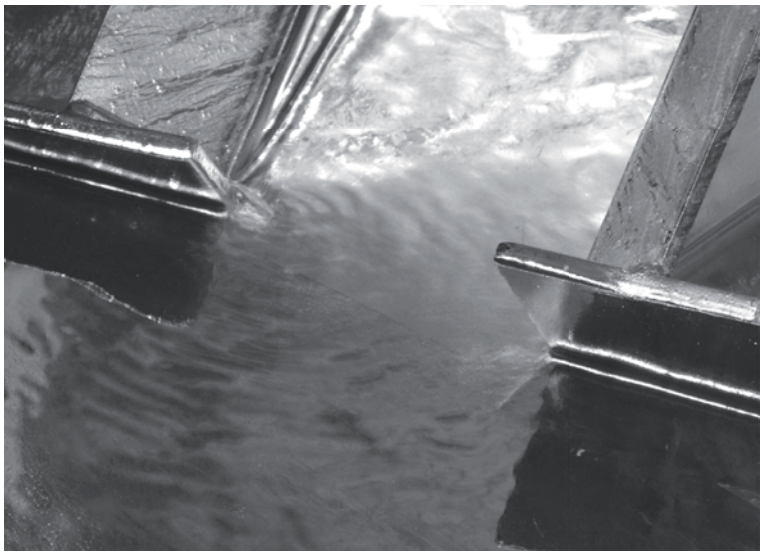

ZWM TERMETAL
Krąg 1A near Starogard Gdański
PL 83-200 Starogard Gdański
tel. +48 58 56 231 94
tel. +48 58 56 231 38
fax +48 58 56 333 70
e-mail: stg@termetal.pl

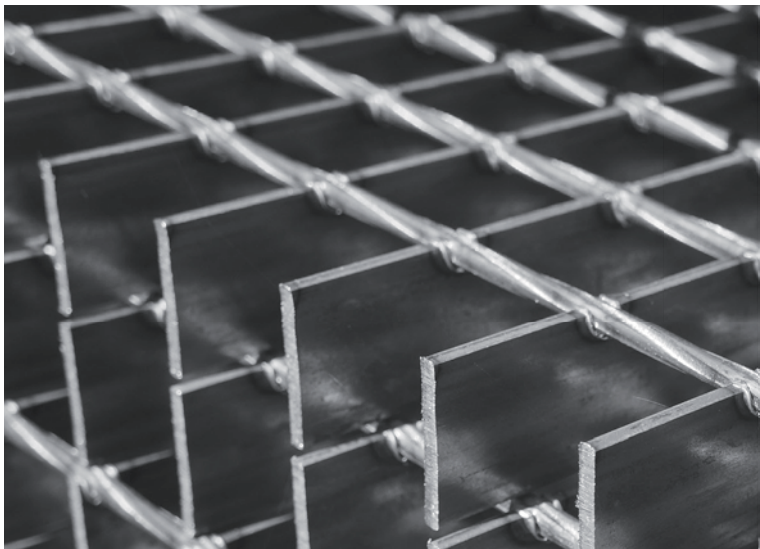

TERMETAL PIOTR GLANER Sp.K.
GALVANISATION PLANT KIELCE
26-026 Morawica
Dębska Wola 1E
tel. (+48) 41 260 55 56
fax. (+48) 41 201 05 75
e-mail: kielce@termetal.pl

www.termetal.pl